Quality and Innovation

INTELLIGENT ACTUATOR

Cartesian Robots

ICSA2/ICSPA2
ICSA3/ICSPA3

Contents

- Cartesian Robot Series Contents 42
- Features 43
- Product Types 45
- Two-Axes Configuration Unit Selection Table 47
- Three-Axes Configuration Unit Selection Table 49
- Points to Note 59
- Explanation of Model Specification Items 61
- Installation Method 63
- System Configuration 65

Cartesian Robot Series Contents

Two-Axes Configuration	X-Y Two-Axes Configuration	XYB (Y-Axis Base Mount) Type	**ICSA2(ICSPA2)-BA□H**	67
			ICSA2(ICSPA2)-BA□M	69
			ICSA2(ICSPA2)-BB□H	71
			ICSA2(ICSPA2)-BB□M	73
			ICSA2(ICSPA2)-BC□H	75
			ICSA2(ICSPA2)-BC□M	77
			ICSA2(ICSPA2)-BD□H	79
			ICSA2(ICSPA2)-BE□H	81
			ICSA2(ICSPA2)-BE□M	83
			ICSA2(ICSPA2)-BF□H	85
		XYS (Y-Axis Slider Mount) Type	**ICSA2(ICSPA2)-SA□H**	87
			ICSA2(ICSPA2)-SA□M	89
			ICSA2(ICSPA2)-S1C□H	91
			ICSA2(ICSPA2)-S1C□M	93
			ICSA2(ICSPA2)-S2C□H	95
			ICSA2(ICSPA2)-SG□H	97
	X-Z Two-Axes Configuration	XZ (Z-Axis Base Mount) Type	**ICSA2(ICSPA2)-ZAH**	99
			ICSA2(ICSPA2)-ZAM	101
			ICSA2(ICSPA2)-Z1CH	103
			ICSA2(ICSPA2)-Z1CM	105
			ICSA2(ICSPA2)-Z2CH	107
			ICSA2(ICSPA2)-ZDH	109
			ICSA2(ICSPA2)-ZGH	111
			ICSA2(ICSPA2)-ZHH	113
	Y-Z Two-Axes Configuration	YZ (Y-Axis Slider Mount) Type	**ICSA2(ICSPA2)-YAH**	115
			ICSA2(ICSPA2)-YAM	117
			ICSA2(ICSPA2)-YCH	119
			ICSA2(ICSPA2)-YCM	121
			ICSA2(ICSPA2)-YGH	123
	X-Y Two-Axes Gantry Configuration	XYG (Gantry) Type	**ICSA2(ICSPA2)-G1JH**	125
			ICSA2(ICSPA2)-G2JH	127
Three-Axes Configuration	X-Y Base Mount (XYB) + Z-Axis Configuration	Z-Axis Base Mount Type (Z-Axis Slider Flexible)	**ICS(P)A3-BA□MB1□**	129
			ICS(P)A3-BB□HB1□	131
			ICS(P)A3-BB□MB1□	133
			ICS(P)A3-BB□MB2□	135
			ICS(P)A3-BC□HB1□	137
			ICS(P)A3-BC□HB2□	139
			ICS(P)A3-BC□HB3□	141
			ICS(P)A3-BC□MB1□	143
			ICS(P)A3-BC□MB2□	145
			ICS(P)A3-BC□MB3□	147
			ICS(P)A3-BD□HB1□	149
			ICS(P)A3-BD□HB2□	151
			ICS(P)A3-BD□HB3□	153
			ICS(P)A3-BE□HB1□	155
			ICS(P)A3-BE□HB2□	157
			ICS(P)A3-BE□HB3□	159
			ICS(P)A3-BE□MB2□	161
			ICS(P)A3-BE□MB3□	163
			ICS(P)A3-BF□HB1□	165
			ICS(P)A3-BF□HB2□	167
			ICS(P)A3-BF□HB3□	169
		Z-Axis Slider Mount Type (Z-Axis Body Flexible)	**ICS(P)A3-BA□MS1□**	171
			ICS(P)A3-BB□HS1□	173
			ICS(P)A3-BB□MS1□	175
			ICS(P)A3-BC□HS1□	177
			ICS(P)A3-BC□HS3□	179
			ICS(P)A3-BC□MS1□	181
			ICS(P)A3-BC□MS3□	183
			ICS(P)A3-BD□HS1□	185
			ICS(P)A3-BD□HS3□	187
			ICS(P)A3-BE□HS1□	189
			ICS(P)A3-BE□HS3□	191
			ICS(P)A3-BE□MS1□	193
			ICS(P)A3-BE□MS3□	195
			ICS(P)A3-BF□HS1□	197
			ICS(P)A3-BF□HS3□	199
	X-Y Gantry (XYG) + Z-Axis Configuration	Z-Axis Base Mount Type (Z-Axis Slider Flexible)	**ICS(P)A3-G1JHB1□**	201
			ICS(P)A3-G1JHB2□	203
			ICS(P)A3-G1JHB3□	205
			ICS(P)A3-G2JHB1□	207
			ICS(P)A3-G2JHB2□	209
			ICS(P)A3-G2JHB3□	211
		Z-Axis Slider Mount Type (Z-Axis Body Flexible)	**ICS(P)A3-G1JHS1□**	213
			ICS(P)A3-G1JHS2□	215
			ICS(P)A3-G1JHS3□	217
			ICS(P)A3-G2JHS1□	219
			ICS(P)A3-G2JHS2□	221
			ICS(P)A3-G2JHS3□	223

* In the above model names, □indicates the configuration direction (1 through 4).

Cartesian Robot Series Features

The ICSA/ICSPA Cartesian robots are configuration units based on the two-axes and three-axes configuration patterns that are frequently used. These actuators come pre-wired with brackets attached, so they can be installed in your equipment and used immediately after delivery.

1. Configuration Variations

Fifty-seven standard configuration types are provided, so the user can find the model best suited to existing conditions. We can also build custom configurations not currently represented in the standard range. Please contact us regarding your specifications.

Two-Axes Configuration Type

Two-axes configuration units are available in **31 types**, each combining one of five configuration patterns with different speeds and motor capacities.

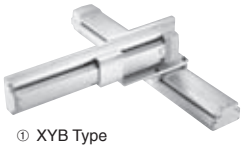

① XYB Type

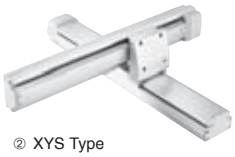

② XYS Type

③ XZ Type

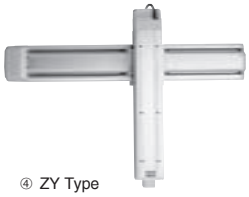

④ ZY Type

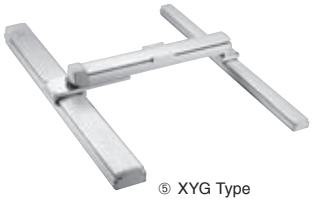

⑤ XYG Type

① XYB (Y-Axis Base Mount)Type

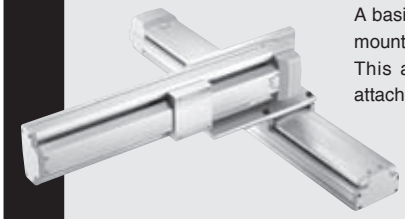

A basic configuration type where the Y-axis base is mounted to the X-axis bracket.
This actuator operates with a device or Z-axis attached to the Y-axis slider.

Point 1 There are four patterns of Y-axis configuration directions to choose from (refer to the figure shown to right).

Point 2 Select the Y-axis wiring specification from the two options of self-standing cable (standard) and cable track.

■ Configuration Direction

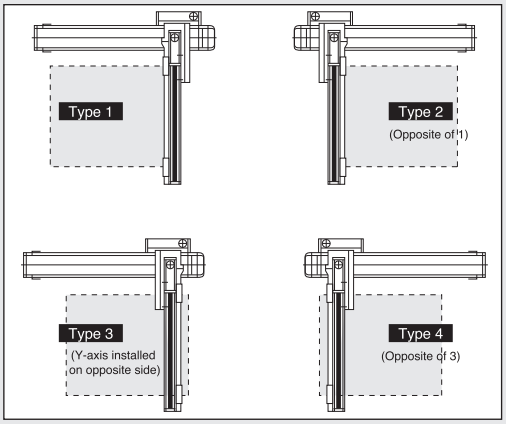

② XYS (Y-Axis Slider Mount) Type

The Y-axis slider is mounted to the X-axis bracket in a manner allowing the Y-axis to move.
Use this type when the Y-axis itself must be moved back and forth to avoid an obstacle, etc.

Point 1 There are four patterns of Y-axis configuration directions to choose from (refer to the figure shown to right).

Point 2 Only the self-standing cable option is available for the Y-axis wiring specification.

■ Configuration Direction

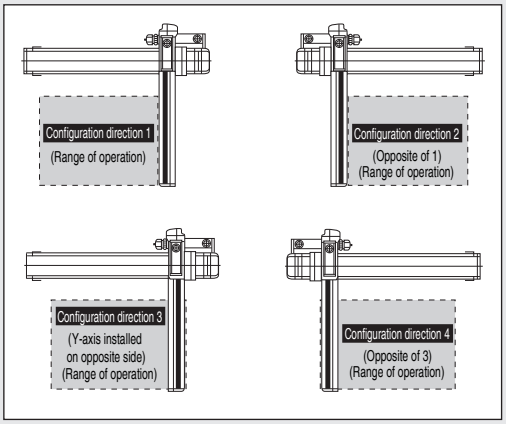

③ XZ (Z-Axis Base Mount) Type

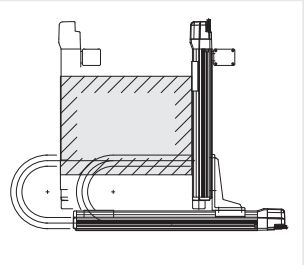

The Z-axis (vertical axis) is positioned vertically on the X-axis.
Use this type in such applications as inserting loads into a stocker or moving a pallet up and down.

Point 1 Since the Z-axis comes standard with a brake, the slider will not drop even when the power is turned off.

Point 2 The maximum stroke is 2500 mm for the X-axis and 500mm for the Z-axis.
(Consult IAI if you need a longer stroke.)

④ YZ (Y-Axis Slider Mount) Type

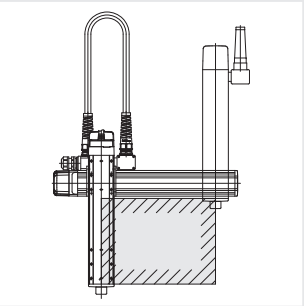

The Y-axis is positioned on its side and its slider is connected to the slider of the Z-axis (vertical axis).
Since the Z-axis moves vertically, this type can be fitted with a chuck or other device on the Z-axis for transfer of loads.

Point 1 Since the Z-axis comes standard with a brake, the slider will not drop even when the power is turned off.

Point 2 The standard wiring specification of the Z-axis is the self-standing cable, but the cable track can also be used (custom order).

Point 3 The Z-axis base can be mounted (custom order).

⑤ XYG (Gantry) Type

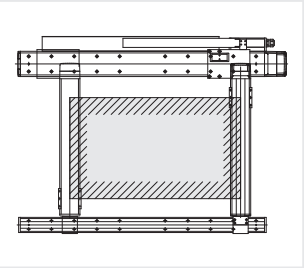

The Y-axis of the XYB type is placed flat and a support guide is attached at the tip of the Y-axis.
Use this type for transferring heavy objects or when the Y-axis stroke is long and the tip might sag.

Point 1 A maximum of 40 kg can be transferred.

Point 2 The maximum stroke is 2500 mm for the X-axis and 1200 mm for the Y-axis.
(Consult IAI if you need a longer stroke.)

Three-Axes Configuration Type

Three-axes configuration units are available in **102 types**, each combining either the basic XYB (Y-axis base mount) type or high-rigidity XYG (gantry) type with a Z-axis (vertical axis) of high-speed, medium-speed or low-speed specification, providing a maximum load capacity of 19 kg.

Consult IAI for details on three-axes combined types.

Four-Axes Configuration Type

We also offer four-axes configuration types, which are three-axes configuration units with a rotating axis integrated with the Z-axis. Please advise us of your desired conditions, and we will select the best configuration and submit drawings.

Cartesian Robot Series Product Types

■ Two-Axes Configuration

X-Y Two-Axes Configuration

Y-axis base mount

The Y-axis slider moves horizontally.

XYB type

BA□H, BA□M
BB□H, BB□M
BC□H, BC□M
BD□H
BE□H, BE□M
BF□H

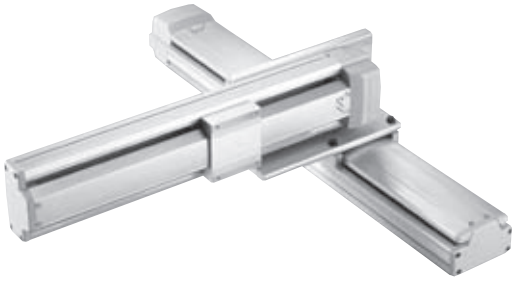

P67~86

Y-axis slider mount

The entire Y-axis moves horizontally.

XYS type

SA□H, SA□M
S1C□H, S1C□M
S2C□H
SG□H

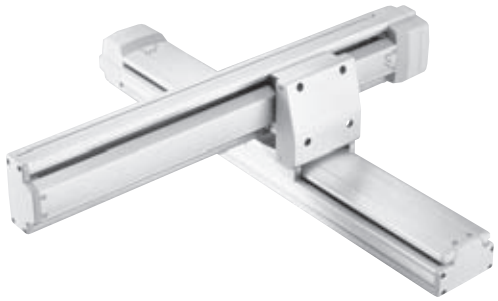

P87~98

■ Three-Axes Configuration

X-Y Base Mount (XYB)+Z-Axis Configuration

Z-Axis Base Mount Type

The Z-axis is base mounted to the Y slider.
The Z slider moves vertically.
The Y-axis slider moves horizontally.

BA□MB1
BB□HB1
BB□MB1
BC□HB□□
BC□MB□□
BD□HB□□
BE□HB□□
BE□MB□□
BF□HB□□

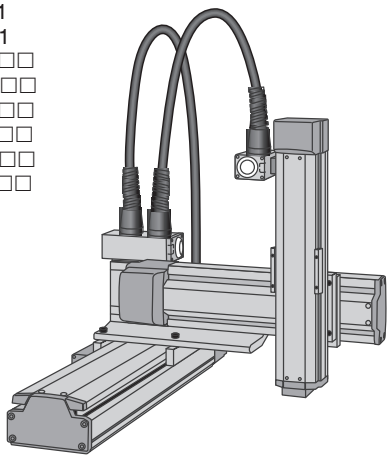

P129~170

Z-Axis Slider Mount Type

The Z-axis slider is mounted to the Y-axis slider.
The body of the Z-axis moves vertically.
The Y-axis slider moves horizontally.

BA□MS1□
BB□HS1□
BB□MS□□
BC□HS□□
BC□MS□□
BD□HS□□
BE□HS□□
BE□MS□□
BF□HS□□

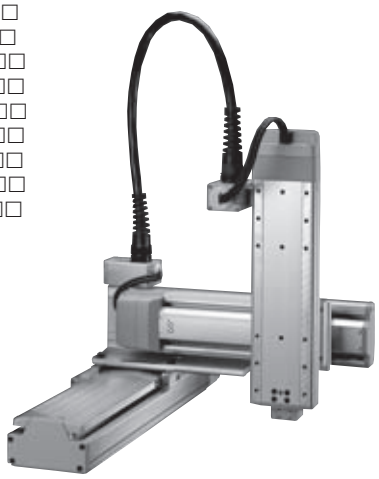

P171~200

Z-axis base mount

The Z-axis is positioned vertically and mounted to the X-axis. The Z-axis slider moves vertically.

XZ type

ZAH, ZAM
Z1CH, Z1CM
Z2CH
ZDH
ZGH
ZHH

P99~114

Y-axis slider mount

The Z-axis slider is mounted to the Y-axis positioned on its side. The entire Z-axis moves vertically.

YZ type

YAH, YAM
YCH, YCM
YGH

P115~124

Gantry

A support axis is added in parallel with the X-axis and the Y-axis base is mounted to the sliders on the two axes. The Y-axis slider moves horizontally.

XYG type

G1JH
G2JH

P125~128

■ Four-Axes Configuration

X-Y Gantry (XYG)+Z-Axis Configuration

Z-Axis Base Mount Type

The Z-axis base mounted to the Y-axis, Z slider moves vertically. The Y-axis slider moves horizontally.

G1JHB□□
G2JHB□□

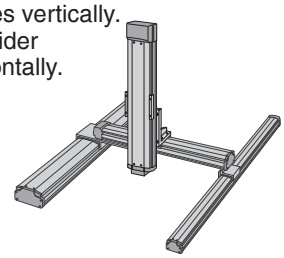

P201~212

Z-Axis Slider Mount Type

The Z-axis slider is mounted to the Y-axis slider and moves vertically. The Y-axis slider moves horizontally.

G1JHS□□
G2JHS□□

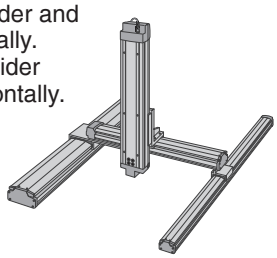

P213~224

X-Y Base Mount + Z-Axis + Rotating-Axis Configuration

Z-Axis Base Mount Type

the Z-axis base (Z-slider mounted to Y) of three-axes configuration provides theta motion.

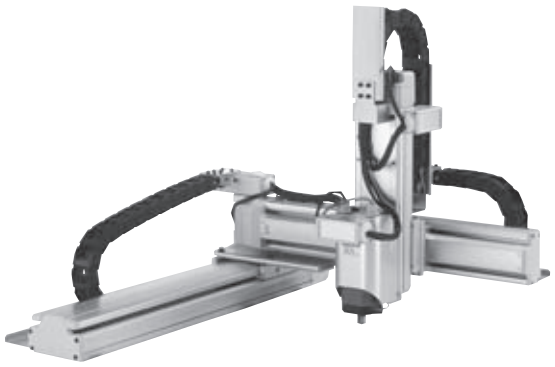

Cartesian Robot Series Two-Axes Configuration Unit Selection Table

How to Select a Unit (Explanation of the Table)

Start from ① and move toward right as you confirm each condition to select a desired type.

① Select the configuration.

- **XYB type** The Y-axis base is mounted to the X-axis. (The Y-axis slider moves horizontally.)
- **XYS type** The Y-axis slider is mounted to the X-axis. (The Y-axis itself moves horizontally.)
- **XZ type** The Z-axis is positioned vertically and mounted to the X-axis. (The Z-axis slider moves vertically.)
- **YZ type** The Z-axis slider is mounted to the Y-axis positioned on its side. (The Z-axis itself moves vertically.)
- **XYG type** A support axis is added in parallel with the X-axis and the Y-axis base is mounted to the sliders on the two axes. (The Y-axis slider moves horizontally.)

② Select the line that satisfies both the required Y-axis (Z-axis) stroke and load capacity, and then follow that line to the next column on right.

(Fields with a "-" indicate that this particular configuration is not supported.)

③ Check the X-axis stroke.

If the condition is not satisfied, go down to the line below and select a larger type.

④ Select the desired speed.

⑤ You have selected the type that satisfies all your desired conditions.

Refer to page 43 for the X/Y-axis configuration directions.

Select the X/Y-axis and Z-axis wiring specifications from the following two options:

SC : Self-standing cable
CT : Cable track

* Refer to page 45.

① Configuration ② Y-axis stroke (mm)

XYB type

Load capacity (kg)	100	200	300	400	500	600	700
	5.2	4.5	3.8	3.1	–	–	–
	18.2	16.6	12.1	8.1	–	–	–
	12.0		11.8	11.1	–	–	–
	25.0			21.8	–	–	–
	20.0				18.7	–	–
	28.8	27.8	26.8	21.8	18.7	–	–
	20.0				18.7	–	–
	–	40.0		33.0	27.3	22.9	19.3
	–	51.2	40.5	33.0	27.3	22.9	19.3
	–	40.0		33.0	27.3	22.9	19.3

XYS type

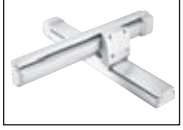

Load capacity (kg)	100	200	300	400	500	600	700
	6.2	5.5	4.8	4.1	–	–	–
	19.2	14.3	9.3	6.4	–	–	–
	9.7	8.7	7.7	6.7	5.6	–	–
	29.7	29.1	19.3	13.6	9.7	–	–
	29.2	28.2	19.3	13.6	9.7	–	–
	–	–	20.7	18.2	12.5	8.4	–

XZ type

Load capacity (kg)	100	200	300	400	500	600	700
	4.0	3.3	2.6	–	–	–	–
	10.0	7.5	6.0	–	–	–	–
	8.5	7.5	6.5	5.5	–	–	–
	19.0	17.0	14.0	12.0	–	–	–
	19.0	16.0	13.0	11.0	–	–	–
	19.0	16.0	13.0	11.0	–	–	–
	22.0	18.0	16.0	12.0	10.0	–	–
	22.0	18.0	16.0	12.0	10.0	–	–

YZ type

Load capacity (kg)	100	200	300	400	500	600	700
	3.0	2.3	1.6	–	–	–	–
	11.0	10.3	9.6	–	–	–	–
	11.9	10.9	9.9	8.9	–	–	–
	13.1	12.1	11.1	10.1	–	–	–
	27.0	25.5	23.9	22.3	20.7	–	–

XYG type

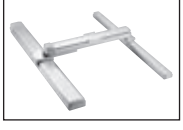

Load capacity (kg)	500 ~ 700	800 ~ 1200
	40.0	–
	–	40.0

Caution

The maximum speed of some long-stroke types (indicated by *) has been reduced to prevent the ball screw from reaching a dangerous speed. Once the desired type has been selected, check the actual speed specification on the page corresponding to the selected type.

③ X-axis stroke	④ Maximum speed (X-axis/Y-axis)	⑤ Applicable type	
		Configuration type	Page
(mm)	(mm/sec)		
100 ~ 600	800/800	BA□H	→ P67
100 ~ 600	400/400	BA□M	→ P69
200 ~ 800	*1000/800	BB□H	→ P71
200 ~ 800	*500/400	BB□M	→ P73
200 ~ 800	*1000/1000	BC□H	→ P75
200 ~ 800	*500/500	BC□M	→ P77
800 ~ 2000	*1000/1000	BD□H	→ P79
300 ~ 1000	*1000/1000	BE□H	→ P81
300 ~ 1000	*500/500	BE□M	→ P83
1000 ~ 2500	*1000/1000	BF□H	→ P85

X-axis stroke	Maximum speed (X-axis/Y-axis)	Configuration type	Page
(mm)	(mm/sec)		
100 ~ 600	800/800	SA□H	→ P87
100 ~ 600	400/400	SA□M	→ P89
200 ~ 800	*1000/1000	S1C□H	→ P91
200 ~ 800	*500/500	S1C□M	→ P93
200 ~ 800	*1000/1000	S2C□H	→ P95
300 ~ 800	1000/1000	SG□H	→ P97

X-axis stroke	Maximum speed (X-axis/Z-axis)	Configuration type	Page
(mm)	(mm/sec)		
100 ~ 600	800/400	ZAH	→ P99
100 ~ 600	400/200	ZAM	→ P101
200 ~ 800	*1000/500	Z1CH	→ P103
200 ~ 800	*500/250	Z1CM	→ P105
200 ~ 800	*1000/500	Z2CH	→ P107
800 ~ 2000	*1000/500	ZDH	→ P109
200 ~ 800	1000/500	ZGH	→ P111
1000 ~ 2500	*1000/500	ZHH	→ P113

Y-axis stroke	Maximum speed (Y-axis/Z-axis)	Configuration type	Page
(mm)	(mm/sec)		
100 ~ 400	800/400	YAH	→ P115
100 ~ 400	400/200	YAM	→ P117
200 ~ 700	1000/500	YCH	→ P119
200 ~ 700	*500/250	YCM	→ P121
200 ~ 700	1000/500	YGH	→ P123

X-axis stroke	Maximum speed (X-axis/Y-axis)	Configuration type	Page
(mm)	(mm/sec)		
1000 ~ 2500	*1000/1000	G1JH	→ P125
1000 ~ 2500	*1000/1000	G2JH	→ P127

Cartesian Robots Series Three-Axes Configuration Unit Selection Table

How to Select a Unit (Explanation of the Table) Start from ① and move toward right as you confirm each condition to select a desired type.

① Select the installation method of Z-axis from the followings:

[Z-Axis Base Mount]
(The Z-axis base is mounted to the Y-axis slider: The Z-axis slider moves vertically.)

[Z-Axis Slider Mount]
(The Z-axis slider is mounted to the Y-axis slider: The Z-axis itself moves vertically.)

② Select the Z-axis type from High-speed, Mid-speed, and Low-speed.
(The Slider Mount Type is available only in Mid-speed and Low-speed.

③ Select the load capacity for Z-axis
(total weight of load and jig)

④ Select the desired Z-axis stroke from the chart.

⑤ Check the Y-axis stroke and load capacity.
(If the condition is not satisfied, go down to the line below and select larger load capacity.)

⑥ Check the X-axis stroke.
If the condition is not satisfied, go down to the line below and select larger type.
*( ) specifies the case of BD□HB□□ or BF□HB□□.

⑦ Check the maximum speed for X-axis and Y-axis.
If the condition is not satisfied, go down to the line below and select larger type.

⑧ You have selected the type that satisfies all your desired conditions.

Refer to page 45 for the X/Y-Axis configuration directions.
Select the X/Y-Axis and Z-Axis wiring specifications from the two options to the right.
Only cable track is available for X/Y-Axis type D, F, 1J, and 2J.
Only Self-standing cable is available for Z-Axis Slider Mount Type.
We can also build custom configurations not currently represented in the standard range.
Please contact us regarding your specifications.

SC: Self-standing cable
CT: Cable track

* Refer to page 225.

[Z-Axis Base Mount] ①

② ③ ④ ⑤

Z-Axis Speed Type	Z-Axis			Y-Axis Stroke (mm)								
	Load Capacity	Stroke (mm)			100	200	300	400	500	600	700	800~1200
High-Speed Type 800~1000 mm/sec	3kg or less	100~300	→	Load Capacity (kg)	3.0				–	–	–	–
		100~400			3.0					–	–	–
		100~500			–	3.0						–
		100~600			–	–	–	–	3.0			–
		100~600			–	–	–	–	–	–	–	3.0
	9kg or less	100			9.0					–	–	–
					–	9.0						–
		200			9.0				8.4	–	–	–
					–	9.0						–
		300	→		8.6				7.3	–	–	–
					–	9.0					7.9	–
		400			7.6				6.3	–	–	–
					–	9.0					6.9	–
		500			–	9.0					5.8	–
		1000~600			–	–	–	–	9.0			–
					–	–	–	–	–	–	–	9.0

Example of Selection

Conditions

The Z-Axis is subject to base mount.
Allowable tip load : 2kg
Speed : 800mm/sec or more
Z-Axis Stroke : 200mm
Y-Axis Stroke : 500mm
X-Axis Stroke : 700MM

(1) Select the chart of [Z-Axis Base Mount Type].

(2) Select ""High-speed"" type since the desired speed is 800mm/sec."

(3) Select "3kg or less" since the load capacity is 2kg."

(4) Move the line for 100~300 to the right since Z-Axis stroke is 200mm.

(5) The crossed column for Z-Axis stroke 100~300mm and Y-Axis stroke 500mm reads "---" (Not applicable), so apply the line below. Since the Y-Axis stroke on the line covers 500mm, shift to the right."

(6) The X-Axis stroke is applicable up to 800mm, so shift to the right."

(7) The maximum speed for X-Axis/ Y Axis is 1000mm/sec and satisfy the condition. Shift to the right.

(8) As a result, Unit Type [BC□HB1H] is the selected suitable model."

Note The numbers in ( ) in X-Axis stroke in the chart below are for models in ( ) listed in Applicable Type's configuration type.
Example: If the X-Axis stroke in the above example is 1000mm, configuration Applicable Type will be [BD□HB1H].

(6) *( ) is for the type BD□HB□□ or BF□HB□□.

(7)

X-Axis Stroke (mm)	Maximum Speed (X-axis / Y-axis) (mm/sec)	(8) Applicable Type: Configuration Type	Page
200~800	1000/800	ICSA [ICSPA] 3-BB□HB1H	→ P131
200~800 (800~2000)	1000/1000	ICSA [ICSPA] 3-BC□HB1H (BD□HB1H)	→ P137 (P149)
300~1000 (1000~2500)	1000/1000	ICSA [ICSPA] 3-BE□HB1H (BF□HB1H)	→ P155 (P165)
1000~2500	1000/1000	ICSA [ICSPA] 3-G1JHB1H	→ P201
	1000/1000	ICSA [ICSPA] 3-G2JHB1H	→ P207
200~800 (800~2000)	1000/1000	ICSA [ICSPA] 3-BC□HB3H (BD□HB3H)	→ P141 (P153)
300~1000 (1000~2500)	1000/1000	ICSA [ICSPA] 3-BE□HB3H (BF□HB3H)	→ P159 (P169)
200~800 (800~2000)	1000/1000	ICSA [ICSPA] 3-BC□HB3H (BD□HB3H)	→ P141 (P153)
300~1000 (1000~2500)	1000/1000	ICSA [ICSPA] 3-BE□HB3H (BF□HB3H)	→ P159 (P169)
200~800 (800~2000)	1000/1000	ICSA [ICSPA] 3-BC□HB3H (BD□HB3H)	→ P141 (P153)
300~1000 (1000~2500)	1000/1000	ICSA [ICSPA] 3-BE□HB3H (BF□HB3H)	→ P159 (P169)
200~800 (800~2000)	1000/1000	ICSA [ICSPA] 3-BC□HB3H (BD□HB3H)	→ P141 (P153)
300~1000 (1000~2500)	1000/1000	ICSA [ICSPA] 3-BE□HB3H (BF□HB3H)	→ P159 (P169)
300~1000 (1000~2500)	1000/1000	ICSA [ICSPA] 3-BE□HB3H (BF□HB3H)	→ P159 (P169)
1000~2500	1000/1000	ICSA [ICSPA] 3-G1JHB3H	→ P205
	1000/1000	ICSA [ICSPA] 3-G2JHB3H	→ P211

[Z-Axis Base Mount] ①

② ③ ④ ⑤

Z-Axis Speed Type	Z-Axis			Y-Axis Stroke (mm)								
	Load Capacity	Stroke (mm)			100	200	300	400	500	600	700	800~1200
Mid-Speed Type 400~500 mm/sec	6kg or less	100	→	Load Capacity (kg)	6.0			2.9	–	–	–	–
					6.0			5.9	–	–	–	–
					6.0				–	–	–	–
		200			6.0			2.3	–	–	–	–
					6.0			5.3	–	–	–	–
					6.0				–	–	–	–
		300			6.0		5.7	1.7	–	–	–	–
					5.6		5.4	4.7	–	–	–	–
					6.0				–	–	–	–
		100~400			6.0					–	–	–
		100~500			–	6.0						–
		100~600			–	–	–	–	6.0			–
		100~600			–	–	–	–	–	–	–	6.0
	9kg or less	100	→	Load Capacity (kg)	9.0				–	–	–	–
					9.0					–	–	–
					9.0							–
		200			9.0				8.4	–	–	–
					9.0							–
		300			8.6				7.3	–	–	–
					9.0						7.9	–
		400			7.6				6.3	–	–	–
					9.0						6.9	–
		500			9.0						5.8	–
		100~600			–	–	–	–	9.0			–
		100~600			–	–	–	–	–	–	–	9.0
	19kg or less	100	→	Load Capacity (kg)	10.7				9.4	–	–	–
					19.0	18.5	17.5	12.5	9.4	–	–	–
					–	19.0			18.0	13.6	10.0	–
					–	–	–	–	19.0			–
					–	–	–	–	–	–	–	19.0
		200			9.7				8.4	–	–	–
					18.5	17.5	16.5	11.5	8.4	–	–	–
					–	19.0			17.0	12.6	9.0	–
					–	–	–	–	19.0			–
					–	–	–	–	–	–	–	19.0
		300			8.6				7.3	–	–	
					17.4	16.4	15.4	10.4	7.3	–	–	
					–	19.0			15.9	11.5	7.9	
					–	–	–	–	19.0			
					–	–	–	–	–	–	–	19.0
		400			7.6				6.3	–	–	–
					16.4	15.4	14.4	9.4	6.3	–	–	–
					–	19.0			14.9	10.5	6.9	–
					–	–	–	–	18.7			–
					–	–	–	–	–	–	–	18.7
		500			–	19.0			13.8	9.4	5.8	–
					–	–	–	–	17.6			–
					–	–	–	–	–	–	–	17.6
		600			–	–	–	–	16.6			–
					–	–	–	–	–	–	–	16.6

⑥ *( ) is for the type BD□HB□□ or BF□HB□□.

	X-Axis Stroke		⑦ Maximum Speed (X-axis / Y-axis)		⑧ Applicable Type	
	(mm)		(mm/sec)		Configuration Type	Page
	100~600		400/400		ICSA [ICSPA] 3-BA□MB1M	→ P129
	200~800		1000/800		ICSA [ICSPA] 3-BB□HB1M	→ P131
	200~800		500/400		ICSA [ICSPA] 3-BB□MB1M	→ P133
	100~600		400/400		ICSA [ICSPA] 3-BA□MB1M	→ P129
	200~800		1000/800		ICSA [ICSPA] 3-BB□HB1M	→ P131
	200~800		500/400		ICSA [ICSPA] 3-BB□MB1M	→ P133
→	100~600	→	400/400	→	ICSA [ICSPA] 3-BA□MB1M	→ P129
	200~800		1000/800		ICSA [ICSPA] 3-BB□HB1M	→ P131
	200~800		500/400		ICSA [ICSPA] 3-BB□MB1M	→ P133
	200~800		1000/1000		ICSA [ICSPA] 3-BC□HB1M (BD□HB1M)	→ P137 (P149)
	300~1000		1000/1000		ICSA [ICSPA] 3-BE□HB1M (BF□HB1M)	→ P155 (P165)
	1000~2500		1000/1000		ICSA [ICSPA] 3-G1JHB1M	→ P201
			1000/1000		ICSA [ICSPA] 3-G2JHB1M	→ P207
	200~800		500/400		ICSA [ICSPA] 3-BB□MB2M	→ P135
	200~800 (800~2000)		1000/1000		ICSA [ICSPA] 3-BC□HB2M (BD□HB2M)	→ P139 (P151)
	300~1000 (1000~2500)		1000/1000		ICSA [ICSPA] 3-BE□HB2M (BF□HB2M)	→ P157 (P167)
	200~800 (800~2000)		1000/1000		ICSA [ICSPA] 3-BC□HB2M (BD□HB2M)	→ P139 (P151)
	300~1000 (1000~2500)		1000/1000		ICSA [ICSPA] 3-BE□HB2M (BF□HB2M)	→ P157 (P167)
→	200~800 (800~2000)	→	1000/1000	→	ICSA [ICSPA] 3-BC□HB2M (BD□HB2M)	→ P139 (P151)
	300~1000 (1000~2500)		1000/1000		ICSA [ICSPA] 3-BE□HB2M (BF□HB2M)	→ P157 (P167)
	200~800 (800~2000)		1000/1000		ICSA [ICSPA] 3-BC□HB2M (BD□HB2M)	→ P139 (P151)
	300~1000 (1000~2500)		1000/1000		ICSA [ICSPA] 3-BE□HB2M (BF□HB2M)	→ P157 (P167)
	300~1000 (1000~2500)		1000/1000		ICSA [ICSPA] 3-BE□HB2M (BF□HB2M)	→ P157 (P167)
	1000~2500		1000/1000		ICSA [ICSPA] 3-G1JHB2M	→ P203
			1000/1000		ICSA [ICSPA] 3-G2JHB2M	→ P209
	200~800 (800~2000)		1000/1000		ICSA [ICSPA] 3-BC□HB3M (BD□HB3M)	→ P141 (P153)
	200~800		500/500		ICSA [ICSPA] 3-BC□MB3M	→ P147
	300~1000 (1000~2500)		1000/1000		ICSA [ICSPA] 3-BE□HB3M (BF□HB3M)	→ P159 (P169)
	1000~2500		1000/1000		ICSA [ICSPA] 3-G1JHB3M	→ P205
			1000/1000		ICSA [ICSPA] 3-G2JHB3M	→ P211
	200~800 (800~2000)		1000/1000		ICSA [ICSPA] 3-BC□HB3M (BD□HB3M)	→ P141 (P153)
	200~800		50/500		ICSA [ICSPA] 3-BC□MB3M	→ P147
	300~1000 (1000~2500)		1000/1000		ICSA [ICSPA] 3-BE□HB3M (BF□HB3M)	→ P159 (P169)
	1000~2500		1000/1000		ICSA [ICSPA] 3-G1JHB3M	→ P205
			1000/1000		ICSA [ICSPA] 3-G2JHB3M	→ P211
	200~800 (800~2000)		1000/1000		ICSA [ICSPA] 3-BC□HB3M (BD□HB3M)	→ P141 (P153)
	200~800		500/500		ICSA [ICSPA] 3-BC□MB3M	→ P147
→	300~1000 (1000~2500)	→	1000/1000	→	ICSA [ICSPA] 3-BE□HB3M (BF□HB3M)	→ P159 (P169)
	1000~2500		1000/1000		ICSA [ICSPA] 3-G1JHB3M	→ P205
			1000/1000		ICSA [ICSPA] 3-G2JHB3M	→ P211
	200~800 (800~2000)		1000/1000		ICSA [ICSPA] 3-BC□HB3M (BD□HB3M)	→ P141 (P153)
	200~800		500/500		ICSA [ICSPA] 3-BC□MB3M	→ P147
	300~1000 (1000~2500)		1000/1000		ICSA [ICSPA] 3-BE□HB3M (BF□HB3M)	→ P159 (P169)
	1000~2500		1000/1000		ICSA [ICSPA] 3-G1JHB3M	→ P205
			1000/1000		ICSA [ICSPA] 3-G2JHB3M	→ P211
	300~1000 (1000~2500)		1000/1000		ICSA [ICSPA] 3-BE□HB3M (BF□HB3M)	→ P159 (P169)
	1000~2500		1000/1000		ICSA [ICSPA] 3-G1JHB3M	→ P205
			1000/1000		ICSA [ICSPA] 3-G2JHB3M	→ P211
	1000~2500		1000/1000		ICSA [ICSPA] 3-G1JHB3M	→ P205
			1000/1000		ICSA [ICSPA] 3-G2JHB3M	→ P211

[Z-Axis Base Mount] ①

② Z-Axis Speed Type	③ Z-Axis Load Capacity	④ Z-Axis Stroke (mm)		⑤ Load Capacity (kg)	Y-Axis Stroke (mm) 100	200	300	400	500	600	700	800~1200	
Low-Speed Type 200~250 mm/sec	14kg or less	100	→		13.0	11.4	6.9	2.9	–	–	–	–	
					7.1		6.9	6.2	–	–	–	–	
					14.0				–	–	–	–	
					14.0				13.5	–	–	–	
					–	14.0						–	
		200			12.4	10.8	6.3	2.3	–	–	–	–	
					6.1		5.9	5.2	–	–	–	–	
					14.0				–	–	–	–	
					14.0				12.9	–	–	–	
					–	14.0					13.5	–	
		300			11.8	10.2	5.7	1.7	–	–	–	–	
					5.6		5.4	4.7	–	–	–	–	
					14.0				–	–	–	–	
					14.0				12.3	–	–	–	
					–	14.0					12.9		
		400			13.5				11.7	–	–	–	
					–	14.0					12.3	–	
		500			–	14.0					11.7	–	
		100~600			–	–	–	–	14.0			–	
		100~600			–	–	–	–	–	–	–	14.0	
	19kg or less	100	→		15.9			12.7	–	–	–		
					10.7				9.4	–	–	–	
					19.0	18.5	17.5	12.5	9.4	–	–	–	
					–	19.0			18.0	13.6	10.0	–	
					–	–	–	–	19.0			–	
					–	–	–	–	–	–	–	19.0	
		200			14.6			11.4	–	–	–	–	
					9.7				8.4	–	–	–	
					18.5	17.5	16.5	11.5	8.4	–	–	–	
					–	19.0			17.0	12.6	9.0	–	
					–	–	–	–	19.0			–	
					–	–	–	–	–	–	–	19.0	
		300			13.8			10.6	–	–	–	–	
					8.6				7.3	–	–	–	
					17.4	16.4	15.4	10.4	7.3	–	–	–	
					–	19.0			15.9	11.5	7.9	–	
					–	–	–	–	19.0				
					–	–	–	–	–	–	–	19.0	
		400			12.8			9.6	–	–	–	–	
					7.6				6.3	–	–	–	
					16.4	15.4	14.4	9.4	6.3	–	–	–	
					–	19.0			14.9	10.5	6.9	–	
					–	–	–	–	18.7			–	
					–	–	–	–	–	–	–	18.7	
		500			–	19.0			13.8	9.4	5.8	–	
					–	–	–	–	17.6			–	
					–	–	–	–	–	–	–	17.6	
		100~600			–	–	–	–	16.6			–	
		100~600			–	–	–	–	–	–	–	16.6	

(6) *( ) is for the type BD□HB□□ or BF□HB□□.

(7)

(8) Applicable Type

X-Axis Stroke (mm)	Maximum Speed (X-axis / Y-axis) (mm/sec)	Configuration Type	Page
100~600	400/400	ICSA [ICSPA] 3-BA□MB1L	→ P129
200~800	1000/1000	ICSA [ICSPA] 3-BB□HB1L	→ P131
200~800	500/400	ICSA [ICSPA] 3-BB□MB1L	→ P133
200~800 (800~2000)	1000/1000	ICSA [ICSPA] 3-BC□HB1L (BD□HB1L)	→ P137 (P149)
300~1000 (1000~2500)	1000/1000	ICSA [ICSPA] 3-BE□HB1L (BF□HB1L)	→ P155 (P165)
100~600	400/400	ICSA [ICSPA] 3-BA□MB1L	→ P129
200~800	1000/1000	ICSA [ICSPA] 3-BB□HB1L	→ P131
200~800	500/400	ICSA [ICSPA] 3-BB□MB1L	→ P133
200~800 (800~2000)	1000/1000	ICSA [ICSPA] 3-BC□HB1L (BD□HB1L)	→ P137 (P149)
300~1000 (1000~2500)	1000/1000	ICSA [ICSPA] 3-BE□HB1L (BF□HB1L)	→ P155 (P165)
100~600	400/400	ICSA [ICSPA] 3-BA□MB1L	→ P129
200~800	1000/1000	ICSA [ICSPA] 3-BB□HB1L	→ P131
200~800	500/400	ICSA [ICSPA] 3-BB□MB1L	→ P133
200~800 (800~2000)	1000/1000	ICSA [ICSPA] 3-BC□HB1L (BD□HB1L)	→ P137 (P149)
300~1000 (1000~2500)	1000/1000	ICSA [ICSPA] 3-BE□HB1L (BF□HB1L)	→ P155 (P165)
200~800	1000/1000	ICSA [ICSPA] 3-BC□HB1L (BD□HB1L)	→ P137 (P149)
300~1000 (1000~2500)	1000/1000	ICSA [ICSPA] 3-BE□HB1L (BF□HB1L)	→ P155 (P165)
300~1000 (1000~2500)	1000/1000	ICSA [ICSPA] 3-BE□HB1L (BF□HB1L)	→ P155 (P165)
1000~2500	1000/1000	ICSA [ICSPA] 3-G1JHB1L	→ P201
	1000/1000	ICSA [ICSPA] 3-G2JHB1L	→ P207
200~800	1000/1000	ICSA [ICSPA] 3-BB□MB2L	→ P135
200~800 (800~2000)	500/500	ICSA [ICSPA] 3-BC□HB2L (BD□HB2L)	→ P139 (P151)
200~800	1000/1000	ICSA [ICSPA] 3-BC□MB2L	→ P145
300~1000 (1000~2500)	1000/1000	ICSA [ICSPA] 3-BE□HB2L (BF□HB2L)	→ P157 (P167)
1000~2500	1000/1000	ICSA [ICSPA] 3-G1JHB2L	→ P203
	500/400	ICSA [ICSPA] 3-G2JHB2L	→ P209
200~800	1000/1000	ICSA [ICSPA] 3-BB□MB2L	→ P135
200~800	500/500	ICSA [ICSPA] 3-BC□HB2L (BD□HB2L)	→ P139 (P151)
200~800	1000/1000	ICSA [ICSPA] 3-BC□MB2L	→ P145
300~1000 (1000~2500)	1000/1000	ICSA [ICSPA] 3-BE□HB2L (BF□HB2L)	→ P157 (P167)
1000~2500	1000/1000	ICSA [ICSPA] 3-G1JHB2L	→ P203
	500/400	ICSA [ICSPA] 3-G2JHB2L	→ P209
200~800	1000/1000	ICSA [ICSPA] 3-BB□MB2L	→ P135
200~800 (800~2000)	500/500	ICSA [ICSPA] 3-BC□HB2L (BD□HB2L)	→ P139 (P151)
200~800	1000/1000	ICSA [ICSPA] 3-BC□MB2L	→ P145
300~1000 (1000~2500)	1000/1000	ICSA [ICSPA] 3-BE□HB2L (BF□HB2L)	→ P157 (P167)
1000~2500	1000/1000	ICSA [ICSPA] 3-G1JHB2L	→ P203
	500/400	ICSA [ICSPA] 3-G2JHB2L	→ P209
200~800	1000/1000	ICSA [ICSPA] 3-BB□MB2L	→ P135
200~800 (800~2000)	500/500	ICSA [ICSPA] 3-BC□HB2L (BD□HB2L)	→ P139 (P151)
200~800	1000/1000	ICSA [ICSPA] 3-BC□MB2L	→ P145
300~1000 (1000~2500)	1000/1000	ICSA [ICSPA] 3-BE□HB2L (BF□HB2L)	→ P157 (P167)
1000~2500	1000/1000	ICSA [ICSPA] 3-G1JHB2L	→ P203
	1000/1000	ICSA [ICSPA] 3-G2JHB2L	→ P209
300~1000 (1000~2500)	1000/1000	ICSA [ICSPA] 3-BE□HB2L (BF□HB2L)	→ P157 (P167)
1000~2500	1000/1000	ICSA [ICSPA] 3-G1JHB2L	→ P203
	1000/1000	ICSA [ICSPA] 3-G2JHB2L	→ P209
1000~2500	1000/1000	ICSA [ICSPA] 3-G1JHB2L	→ P203
	1000/1000	ICSA [ICSPA] 3-G2JHB2L	→ P209

[Z-Axis Slider Mount] ①

② Z-Axis Speed Type	③ Z-Axis Load Capacity	④ Z-Axis Stroke (mm)	⑤ Load Capacity (kg)	Y-Axis Stroke (mm) 100	200	300	400	500	600	700	800~1200
Mid-Speed Type 400~500 mm/sec	3kg or less	100	3.0	3.0	3.0	3.0	–	–	–	–	
			3.0	–	3.0	3.0	–	–	–	–	
			3.0	–	–	–	–	3.0	3.0	–	
			3.0	–	–	–	–	–	–	–	3.0
		200	2.3	2.3	2.3	2.3	–	–	–	–	
			2.3	–	2.3	2.3	–	–	–	–	
			2.3	–	–	–	–	2.3	2.3	–	
			2.3	–	–	–	–	–	–	–	2.3
		300	1.6	1.6	1.6	1.6	–	–	–	–	
			1.6	–	1.6	1.6	–	–	–	–	
			1.6	–	–	–	–	1.6	1.6	–	
			1.6	–	–	–	–	–	–	–	1.6
		400	0.9	–	0.9	0.9	–	–	–	–	
			0.9	–	–	–	–	0.9	0.9	–	
			0.9	–	–	–	–	–	–	–	0.9
	12kg or less	100	10.0	10.0	10.0	10.0	–	8.7	–	–	
			10.0	–	11.9	11.9	–	–	10.5	–	
			10.0	–	–	–	–	11.9	11.9	–	
			10.0	–	–	–	–	–	–	–	11.9
		200	9.0	9.0	9.0	9.0	–	7.7	–	–	
			9.0	–	10.9	10.9	–	–	9.5	–	
			9.0	–	–	–	–	10.9	10.9	–	
			9.0	–	–	–	–	–	–	–	10.9
		300	8.0	8.0	8.0	8.0	–	6.7	–	–	
			8.0	–	9.9	9.9	–	–	8.5	–	
			8.0	–	–	–	–	9.9	9.9	–	
			8.0	–	–	–	–	–	–	–	9.9
		400	8.9	–	8.9	8.9	–	–	7.5	–	
			8.9	–	–	–	–	8.9	8.9	–	
			8.9	–	–	–	–	–	–	–	8.9
		500	7.8	–	–	–	–	7.8	7.8	–	19.0
			7.8	–	–	–	–	–	–	–	7.8

(6) *( ) is for the type BD□HB□□ or BF□HB□□.

X-Axis Stroke (mm)	(7) Maximum Speed (X-axis / Y-axis) (mm/sec)	(8) Applicable Type: Configuration Type	Page
100~600	400/400	ICSA [ICSPA] 3-BA□MS1M	→ P171
200~800	1000/800	ICSA [ICSPA] 3-BB□HS1M	→ P173
200~800	500/500	ICSA [ICSPA] 3-BB□MS1M	→ P175
200~800 (800~2000)	1000/1000	ICSA [ICSPA] 3-BC□HS1M (BD□HS1M)	→ P177 (P185)
300~1000 (1000~2500)	1000/1000	ICSA [ICSPA] 3-BE□HS1M (BF□HS1M)	→ P189 (P197)
1000~2500	1000/1000	ICSA [ICSPA] 3-G1JHS1M	→ P213
	1000/1000	ICSA [ICSPA] 3-G2JHS1M	→ P219
100~600	400/400	ICSA [ICSPA] 3-BA□MS1M	→ P171
200~800	1000/800	ICSA [ICSPA] 3-BB□HS1M	→ P173
200~800	500/500	ICSA [ICSPA] 3-BB□MS1M	→ P175
200~800 (800~2000)	1000/1000	ICSA [ICSPA] 3-BC□HS1M (BD□HS1M)	→ P177 (P185)
300~1000 (1000~2500)	1000/1000	ICSA [ICSPA] 3-BE□HS1M (BF□HS1M)	→ P189 (P197)
1000~2500	1000/1000	ICSA [ICSPA] 3-G1JHS1M	→ P213
	1000/1000	ICSA [ICSPA] 3-G2JHS1M	→ P219
100~600	400/400	ICSA [ICSPA] 3-BA□MS1M	→ P171
200~800	1000/800	ICSA [ICSPA] 3-BB□HS1M	→ P173
200~800	500/500	ICSA [ICSPA] 3-BB□MS1M	→ P175
200~800 (800~2000)	1000/1000	ICSA [ICSPA] 3-BC□HS1M (BD□HS1M)	→ P177 (P185)
300~1000 (1000~2500)	1000/1000	ICSA [ICSPA] 3-BE□HS1M (BF□HS1M)	→ P189 (P197)
1000~2500	1000/1000	ICSA [ICSPA] 3-G1JHS1M	→ P213
	1000/1000	ICSA [ICSPA] 3-G2JHS1M	→ P219
300~1000 (1000~2500)	1000/1000	ICSA [ICSPA] 3-BE□HS1M (BF□HS1M)	→ P189 (P197)
1000~2500	1000/1000	ICSA [ICSPA] 3-G1JHS1M	→ P213
	1000/1000	ICSA [ICSPA] 3-G2JHS1M	→ P219
200~800 (800~2000	1000/1000	ICSA [ICSPA] 3-BC□HS3M (BD□HS3M)	→ P179 (P187)
300~1000 (1000~2500)	1000/1000	ICSA [ICSPA] 3-BE□HS3M (BF□HS3M)	→ P191 (P199)
1000~2500	1000/1000	ICSA [ICSPA] 3-G1JHS3M	→ P217
	1000/1000	ICSA [ICSPA] 3-G2JHS3M	→ P223
200~800 (800~2000)	1000/1000	ICSA [ICSPA] 3-BC□HS3M (BD□HS3M)	→ P179 (P187)
300~1000 (1000~2500)	1000/1000	ICSA [ICSPA] 3-BE□HS3M (BF□HS3M)	→ P191 (P199)
1000~2500	1000/1000	ICSA [ICSPA] 3-G1JHS3M	→ P217
	1000/1000	ICSA [ICSPA] 3-G2JHS3M	→ P223
200~800 (800~2000)	1000/1000	ICSA [ICSPA] 3-BC□HS3M (BD□HS3M)	→ P179 (P187)
300~1000 (1000~2500)	1000/1000	ICSA [ICSPA] 3-BE□HS3M (BF□HS3M)	→ P191 (P199)
1000~2500	1000/1000	ICSA [ICSPA] 3-G1JHS3M	→ P217
	1000/1000	ICSA [ICSPA] 3-G2JHS3M	→ P223
300~1000 (1000~2500)	1000/1000	ICSA [ICSPA] 3-BE□HS3M (BF□HS3M)	→ P191 (P199)
1000~2500	1000/1000	ICSA [ICSPA] 3-G1JHS3M	→ P217
	1000/1000	ICSA [ICSPA] 3-G2JHS3M	→ P223
	1000/1000	ICSA [ICSPA] 3-G1JHS3M	→ P217
	1000/1000	ICSA [ICSPA] 3-G2JHS3M	→ P223

[Z-Axis Slider Mount] ①

② ③ ④ ⑤

Z-Axis Speed Type	Z-Axis			Y-Axis Stroke (mm)							
	Load Capacity	Stroke (mm)	Load Capacity (kg)	100	200	300	400	500	600	700	800~1200
Low-Speed Type 400~500 mm/sec	11 kg or less	100		11.0		7.6	3.6	–	–	–	–
				7.2		7.0	6.3	–	–	–	–
				11.0				–	–	–	–
				11.0					–	–	–
				–	11.0						–
				–	–	–	–	11.0			–
				–	–	–	–	–	–	–	11.0
		200		10.3		6.9	2.9	–	–	–	–
				6.5		6.3	5.6	–	–	–	–
				10.3				–	–	–	–
				10.3					–	–	–
				–	10.3						–
				–	–	–	–	10.3			
				–	–	–	–	–	–	–	10.3
		300		9.6		6.2	2.2	–	–	–	–
				5.8		5.6	4.9	–	–	–	–
				9.6				–	–	–	–
				9.6					–	–	–
				–	9.6						–
				–	–	–	–	9.6			–
				–	–	–	–	–	–	–	9.6
		400		–	8.9						–
				–	–	–	–	8.9			–
				–	–	–	–	–	–	–	8.9

⑥ *( ) is for the type BD□HB□□ or BF□HB□□.

	⑦ X-Axis Stroke		Maximum Speed (X-axis / Y-axis)		⑧ Applicable Type	
	(mm)		(mm/sec)		Configuration Type	Page
	100~600		400~400		ICSA [ICSPA] 3-BA□MS1L	→ P171
	200~800		1000~800		ICSA [ICSPA] 3-BB□HS1L	→ P173
	200~800		500~400		ICSA [ICSPA] 3-BB□MS1L	→ P175
	200~800 (800~2000)		1000~1000		ICSA [ICSPA] 3-BC□HS1L (BD□HS1L)	→ P177 (P185)
	300~1000 (1000~2500)		1000~1000		ICSA [ICSPA] 3-BE□HS1L (BF□HS1L)	→ P189 (P197)
	1000~2500		1000~1000		ICSA [ICSPA] 3-G1JHS1L	→ P213
			1000~1000		ICSA [ICSPA] 3-G2JHS1L	→ P219
	100~600		400~400		ICSA [ICSPA] 3-BA□MS1L	→ P171
	200~800		1000~800		ICSA [ICSPA] 3-BB□HS1L	→ P173
	200~800		500~400		ICSA [ICSPA] 3-BB□MS1L	→ P175
	200~800 (800~2000)		1000~1000		ICSA [ICSPA] 3-BC□HS1L (BD□HS1L)	→ P177 (P185)
→	300~1000 (1000~2500)	→	1000~1000	→	ICSA [ICSPA] 3-BE□HS1L (BF□HS1L)	→ P189 (P197)
	1000~2500		1000~1000		ICSA [ICSPA] 3-G1JHS1L	→ P213
			1000~1000		ICSA [ICSPA] 3-G2JHS1L	→ P219
	100~600		400~400		ICSA [ICSPA] 3-BA□MS1L	→ P171
	200~800		1000~800		ICSA [ICSPA] 3-BB□HS1L	→ P173
	200~800		500~400		ICSA [ICSPA] 3-BB□MS1L	→ P175
	200~800 (800~2000)		1000~1000		ICSA [ICSPA] 3-BC□HS1L (BD□HS1L)	→ P177 (P185)
	300~1000 (1000~2500)		1000~1000		ICSA [ICSPA] 3-BE□HS1L (BF□HS1L)	→ P189 (P197)
	1000~2500		1000~1000		ICSA [ICSPA] 3-G1JHS1L	→ P213
			1000~1000		ICSA [ICSPA] 3-G2JHS1L	→ P219
	300~1000 (1000~2500)		1000~1000		ICSA [ICSPA] 3-BE□HS1L (BF□HS1L)	→ P189 (P197)
	1000~2500		1000~1000		ICSA [ICSPA] 3-G1JHS1L	→ P213
			1000~1000		ICSA [ICSPA] 3-G2JHS1L	→ P219

Cartesian Robot Series Points to Note

Notes on Catalog Specifications

Speed

**"Speed" refers to the specified speed at which the actuator slider will move.
The slider accelerates from a stationary state, and once the specified speed is reached it will maintain that speed until the specified position (immediately before the target position), where it will begin decelerating to stop at the target position.**

< Caution >
① With all Cartesian robot models, the maximum speed will not change even when the load placed on the slider is changed.
② The time needed to reach the specified speed will vary according to the acceleration (deceleration).
③ If the travel distance is short, the specified speed may not be reached.
④ ①With a long-stroke axis, the maximum speed will drop to avoid reaching a dangerous speed.
(If you are using a 600 or longer stroke, check the maximum speed for the applicable stroke.)
⑤ When calculating the travel time, consider acceleration, deceleration and stabilization periods in addition to the travel time at the specified speed. (Refer to pages 39 and 40 for the method to calculate travel time.)
⑥ Speed can be set in increments of 1 mm/sec in a program.

Acceleration/Deceleration

**"Acceleration" refers to the rate of change of speed when the speed rises from zero (stationary state) to the specified speed.
"Deceleration" refers to the rate of change of speed when the specified speed drops to zero (stationary state).**

< Caution >
① Increasing the acceleration (deceleration) will shorten the duration the actuator accelerates (decelerates) and decrease the travel time. However, doing so will also cause rapid acceleration (deceleration), resulting in increased shock.
② The load capacity of each type assumes operation at the rated acceleration and maximum speed.
(The rated acceleration is 0.3 G for the standard type and 0.15 G when the lead is 4 or 5 mm.)
③ The ICSA2/ICSPA2 supports a maximum acceleration of 1.0 G.
The load capacity will decrease when the specified acceleration is increased beyond the rated acceleration.
For the load capacity at a raised acceleration, refer to the table of load capacity by acceleration corresponding to each actuator type.
④ Acceleration can be set (specified) in increments of 0.01 G for each position movement in a program.

Positioning Repeatability

**"Positioning repeatability" refers to the positioning accuracy of repeated movements to a pre-stored position.
This is not the same as "absolute positioning accuracy," so exercise caution.**

Home

The home is set on the motor side for the standard specification, or on the counter-motor side for the reversed-home specification.

< Caution >
• The incremental actuator always requires homing every time the power is reconnected. (Homing is not required for the absolute type even after reconnecting the power.)
• During homing the slider (or rod or arm) will move to the mechanical end before reversing, so be careful to prevent contact with surrounding parts.
• Note that changing the home position from the standard to reverse homing specification will require the actuator to be returned to IAI for adjustment.

Duty

IAI recommends that our actuators be used at a duty of 50% or less as a guideline in view of the relationship of service life and accuracy.

$$\text{Duty (\%)} = \frac{\text{Acceleration / Deceleration Time}}{\text{Motion time + Inactivity}} \times 100$$

Options

If the creep sensor (C) or home limit switch (L) is specified, a sensor cover will be provided on the side face of each axis. Therefore, be careful to prevent contact between each cover and peripheral equipment.
As a rule, a sensor cover is installed on the inside of the X-axis (Y-axis overhung direction), or the top side of the Y-axis. The installation position on the Z-axis will vary depending on the configuration pattern.
With a single-axis robot, the option codes will change when the sensor installation position is reversed (opposite side specification). With a Cartesian robot, however, the option codes need not be changed (only C and L are available).

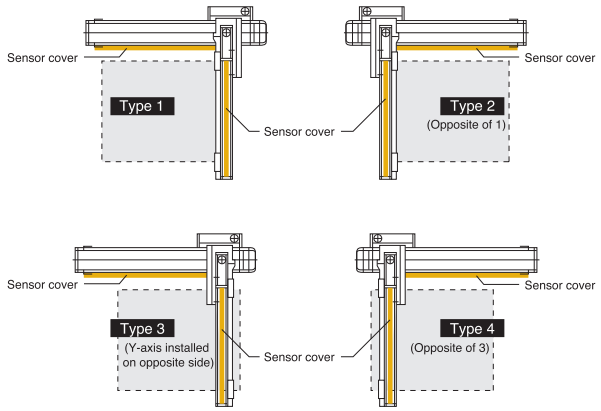

[ICSA2/ICSPA2]

* In the standard specification the creep sensor (C) and home limit switch (L) are installed on the right side as viewed from the motor.

Configuration type	Configuration direction	X-axis installation side	Y-axis installation side	Z-axis installation side
XYB	1	Opposite side	Opposite side	—
	2	Standard	Standard	—
	3	Opposite side	Standard	—
	4	Standard	Opposite side	—
XYS	1	Opposite side	Standard	—
	2	Standard	Opposite side	—
	3	Opposite side	Opposite side	—
	4	Standard	Standard	—
XZ		Opposite side	—	Opposite side
YZ		—	Standard	Opposite side
XYG		Opposite side	Opposite side	—

Cartesian Robot Series Explanation of Model Specification Items

Cartesian robot series features two-axes and three-axes.
Refer to the right page for the explanation of each model specification item.
The selection range for each item will vary depending on the actuator type. For details, refer to the page corresponding to each actuator type.

	(1)		(2)		(3)		(4)		(5)		(6)		(7)		(8)		(9)		(10)
Number of axes	Series		Type		Encoder type		Axis 1 (X-axis, Z-axis) Stroke (cm)	Axis 1 (X-axis, Z-axis) Options	Axis 2 (X-axis, Z-axis) Stroke (cm)	Axis 2 (X-axis, Z-axis) Options	Axis 3 (Z-axis) Stroke (cm)	Axis 3 (Z-axis) Options	Applicable controller		Cable length		Cable management between axis 1 and 2		Cable management between axis 2 and 3
2 axes	ICSA2 ICSPA2	-	BA□H BA□M BB□H BB□M BC□H BC□M BD□H BE□H BE□M BF□H SA□H SA□M S1C□H S1C□M SA□M S2C□H SG□M ZAH ZAM Z1CH Z1CM Z2CH ZDH ZGH ZHH YAH YAM YCH YCM YGH G1JH G2JH	-	A I	-	10 ~ 250	AQ B C L NM RT	10 ~ 120	AQ B C L NM RT			-	T1 T2	-	3L 5L □L (Custom order)	-	CT SC	-	
3 axes	ICSA3 ICSPA3	-	BB□MB□□ BC□HB□□ BC□MB□□ BD□HB□□ BE□HB□□ BE□MB□□ BF□HB□□ G1JHB□□ G2JHB□□ BA□MS1□ BB□HS1□ BB□MS1□ BC□HS□□ BC□MS□□ BD□HS□□ BE□HS□□ BE□MS□□ BF□HS□□ G1JHS□□ G2JHS□□	-		-	10 ~ 250	AQ B C L NM RT	10 ~ 120	AQ B C L NM RT	10 ~ 60	AQ B C L NM RT					CT-CT SC-SC (CT-SC)		

* In the above model names, □ indicates the configuration direction (1 through 4) (refer to page 43).

(1) Series

Indicate the name of each series.

ICSA2: ISA Two-axes configuration
ICSPA2: ISPA Two-axes configuration
ICSA3: ISA Three-axes configuration
ICSPA3: ISPA Three-axes configuration

(2) Type

Indicate the configuration pattern, configuration direction, configuration model and speed type.

Two-Axes Configuration $\frac{B}{(1)}\ \frac{B}{(2)}\ \frac{1}{(3)}\ \frac{H}{(4)}$ Three-Axes Configuration $\frac{B}{(1)}\ \frac{B}{(2)}\ \frac{1}{(3)}\ \frac{H}{(4)}\ \frac{B}{(5)}\ \frac{1}{(6)}\ \frac{M}{(7)}$

(1) XY-axis configuration / component type (*1)	B:XYB Type / S: XYS Type / Z: XZ Type / Y: YZ Type / G: XYG Type
(2) XY-axis configuration / size type	A / B / C / 1C / 2C / D / E / F / G / 1J / 2J
(3) XY-axis configuration direction (*2)	1 / 2 / 3 / 4
(4) XY-axis speed type	H: High-speed type / M: Mid-speed type
(5) Z-axis installation type	B: Base mounted / S: Slider mounted
(6) Z-axis motor output	1: 60W / 2: 100W / 3: 200W
(7) Z-axis speed type	H: High-speed type / M: Mid-speed type / L: Low-speed type

(*1) B(XYB type) and G(XYG type) are available for three-axes configuration.
(*2) Specify only when XY-axis configuration type is B(XYB type) or S(XYS type).

(3) Encoder type

Indicate whether the encoder installed in the actuator is an „absolute type“ or „incremental type.“

A: Absolute type	Since the current slider position will be retained after the power is turned off, homing is not required when the actuator is powered up.
I: Incremental type	Since the slider position data are cleared when the power is turned off, homing must be performed every time the actuator is powered up.

(4) Axis 1 details

Indicate the stroke of axis 1 of the two-axes configuration type, as well as an option(s) to be equipped on that axis.
Enter the stroke in centimeters (e.g., 500-mm stroke ➔ 50).
When selecting multiple options, specify them in alphabetical order without a hyphen in between (e.g., AQ seal + Creep sensor + Limit switch + Reversed home specification➔ AQCLNM).

* Refer to the explanation of single-axis robot models (page 13) for the details of options.

(5) Axis 2 details

Indicate the stroke of axis 2 of the two-axes configuration type, as well as an option(s) to be equipped on that axis.
Other details are the same as above.

(6) Axis 3 details

Indicate the stroke of axis 3 of the three-axes configuration type, as well as an option(s) to be equipped on that axis.
Other details are the same as above.

(7) Applicable controller

Indicate the type of controller to be used with the actuator.
T1: XSEL-J/K, E-Con
T2: XSEL-P/Q, SSEL, S-Con

(8) Cable length

Indicate the length of the motor/encoder cable connecting the axis-1 actuator to the controller.
Two standard lengths of 3L (3 m) and 5L (5 m) are available.
You can also specify a different length as a custom order.
(Maximum length is 20m)

(9) Cable management between axis 1 and 2

Indicate the cable management between axis 1 and 2.

SC: Self-standing cable
CT: Cable track

* The cable management between axis 1 and 2 for types below are available in cable track (CT).
BD□H, BF□H, BD□HB□□, BF□HB□□, G1JHB□□, G2JHB□□, BD□HS□□, BF□HS□□, G1JHS□□, G2JHS□□

(10) Cable management between axis 2 and 3

Indicate the cable management from axis 2 to axis 3.

SC: Self-standing cable
CT: Cable track

* The cable management between axis 2 and 3 is basically the same as that between axis 1 and 2 except the types listed to the left.

Cartesian Robots Installation Method ICSA2/ICSPA2/ICSA3/ICSPA3

Two-Axes Configuration

XYB type

■ Affix the actuators using the through holes provided on the bottom surface of the X-axis.

- BA□H, BA□M : ø7 (P15 ISA-SXM Refer to the bottom plan view.)
- BB□H, BB□M : ø9 (P18 ISA-MXM Refer to the bottom plan view.)
- BC□H, BC□M : ø9 (P19 ISA-MXM Refer to the bottom plan view.)
- BD□H, : ø9 (P20 ISA-MXMX Refer to the bottom plan view.)
- BE□H, BE□M : ø9 (P26 ISA-LXM Refer to the bottom plan view.)
- BF□H, : ø9 (P28 ISA-LXMX Refer to the bottom plan view.)

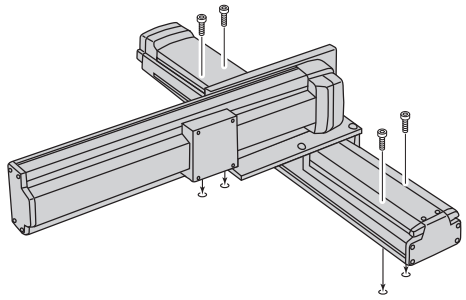

XYS type

■ Affix the actuators using the through holes provided on the bottom surface of the X-axis.

- SA□H, SA□M : ø7 (P15 ISA-SXM Refer to the bottom plan view.)
- S1C□H, S1C□M: ø9 (P18 ISA-MXM Refer to the bottom plan view.)
- S2C□H : ø9 (P19 ISA-MXM Refer to the bottom plan view.)

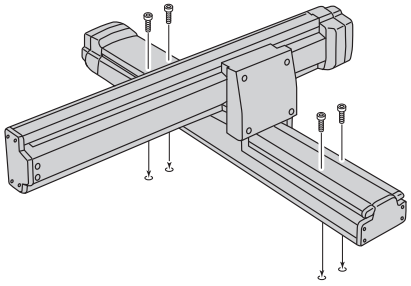

XZ type

■ Affix the actuators using the through holes provided on the bottom surface of the X-axis.

- ZAH, ZAM : ø7 (P15 ISA-SXM Refer to the bottom plan view.)
- Z1CH, Z1CM: ø9 (P18 ISA-MXM Refer to the bottom plan view.)
- Z2CH : ø9 (P19 ISA-MXM Refer to the bottom plan view.)
- ZDH, : ø9 (P20 ISA-MXMX Refer to the bottom plan view.)
- ZGH : ø9 (P26 ISA-LXM Refer to the bottom plan view.)
- ZHH : ø9 (P28 ISA-LXMX Refer to the bottom plan view.)

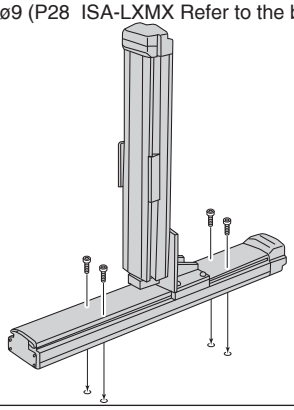

YZ type

■ Affix the actuators using the threaded holes provided on the bottom surface of the actuator.

- YAH, YAM : M6 (P16 ISA-SYM Refer to the bottom plan view.)
- YCH, YCM : M8 (P22 ISA-MYM Refer to the bottom plan view.)
- YGH : M8 (P32 ISA-LYM Refer to the bottom plan view.)

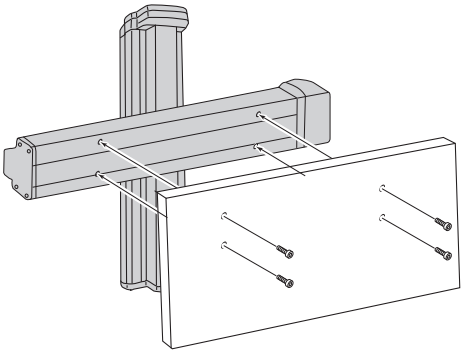

XYG type

■ Affix the actuators using the through holes provided on the bottom surface of the X-axis (driving shart / driven shaft).

- G1JH (Driving shaft) : ø9 (P30 ISA-LXUWX Refer to the bottom plan view.)
  (Driven shaft) : ø7 (P15 ISA-SXM Refer to the bottom plan view.)
- G2JH (Driving shaft) : ø9 (P30 ISA-LXUWX Refer to the bottom plan view.)
  (Driven shaft) : ø7 (P15 ISA-SXM Refer to the bottom plan view.)

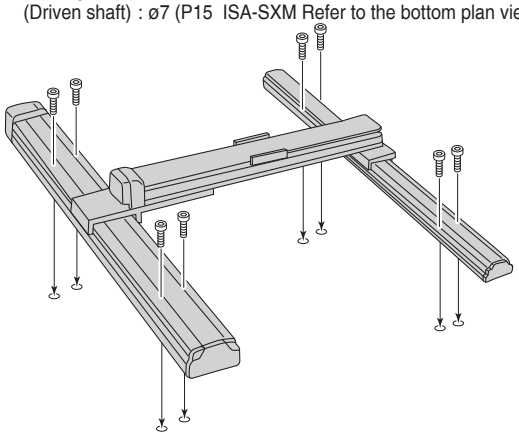

Three-Axes Configuration

XYB+Z Axis type

■Affix the actuators using the through holes provided on the bottom surface of the X-axis.

- BA□MS□□ : ø7 (P15 ISA-SXM Refer to the bottom plan view.)
- BB□□□□□ : ø9 (P18 ISA-MXM Refer to the bottom plan view.)
- BC□□□□□ : ø9 (P19 ISA-MXM Refer to the bottom plan view.)
- BD□□□□□ : ø9 (P20 ISA-MXMX Refer to the bottom plan view.)
- BE□□□□□ : ø9 (P26 ISA-LXM Refer to the bottom plan view.)
- BF□□□□□ : ø9 (P28 ISA-LXMX Refer to the bottom plan view.)

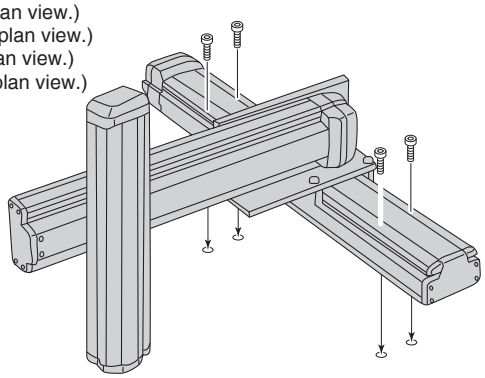

XYG+Z Axis type

■Affix the actuators using the through holes provided on the bottom surface of the X-axis (driving shaft / driven shaft).

- G1JH□□□ (Driving shaft) : ø9 (P30 ISA-LXUWX Refer to the bottom plan view.)
  (Driven shaft) : ø7 (P15 ISA-SXM Refer to the bottom plan view.)
- G2JH□□□ (Driving shaft) : ø9 (P30 ISA-LXUWX Refer to the bottom plan view.)
  (Driven shaft) : ø7 (P15 ISA-SXM Refer to the bottom plan view.)

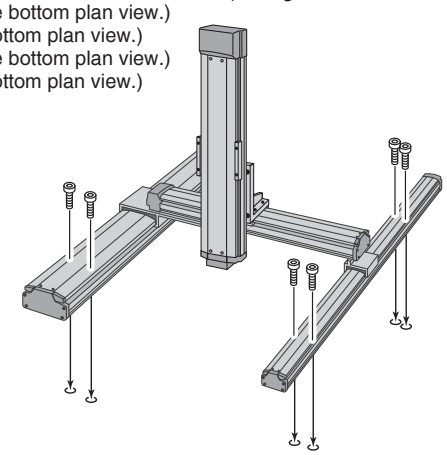

Cartesian Robots Series System Configurations

Actuator

ICSA2 Series
ICSPA2 Series
ICSA3 Series
ICSPA3 Series

Motor Cable
Encoder Cable

Controller

S-SEL

2 Axes Controller

X-SEL(-P(Q)

4 (6) Axes Controller (P. 234)

E-Con/S-Con

1 Axis Controller (P. 226) *

* Operating with E-/S-Con requires as many controllers as the number of axes to operate.

Options

Teaching Pendant
<IA-T-X/XD/XA(-J)>

PC Software
<IA-101-X-CW>
(with RS232C cable, see p. 245)
<IA-101-X-USB(MW)>
(with USB cable)

Teaching Pendant
<RCA-T/TD>/<RCM-T/TD>

PC Software
<RCB-101-MW>/<RCM-101-MW>
(with RS232C cable, see p. 232)
<RCM-101-USB>
(with USB cable) **

** Only S-Con

Application Examples

CD-Rom Stocking

Incremental Positioning

RC Line IA Line	RCS-RA35 ICSA2 RCS-RA55	Controller	RCS-C x 2 X-SEL-K

Cutting

Positioning

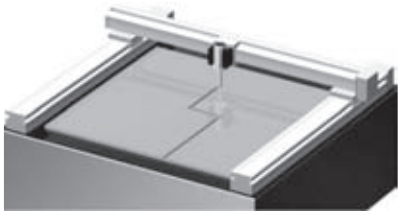

IA Line	ICSA2	Controller	X-SEL-K

Pick & Place

Positioning

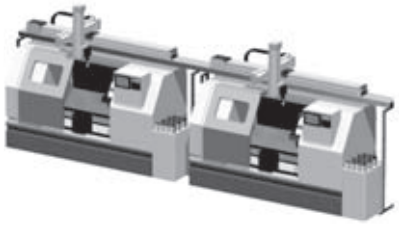

IA Line	ICSA3	Controller	X-SEL-K

Palletizing

XXXXXXX Positioning

IA Line	❶ ISPA-WXM x 2 ❷ ISA-LXM	Controller	X-SEL-K

Circuit Board Inspection

Positioning

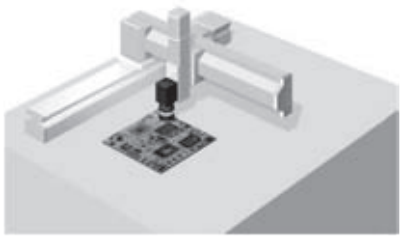

IA Line	ICSA3	Controller	X-SEL-K

Parts Transfer

Positioning

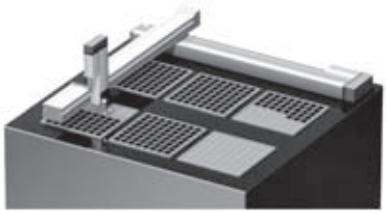

IA Line RC Line	ISA-LXM ISA-MXM RCS-RA55R	Controller	X-SEL-K

Barcode Reading

XXXXX Positioning

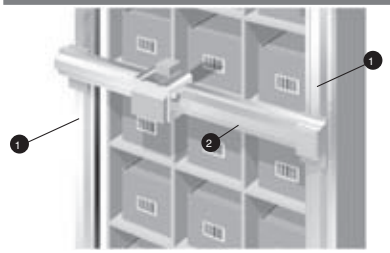

IA Line	❶ ISPA-WXM x 2 ❷ ISA-LYM	Controller	X-SEL-K

Soldering

Positioning

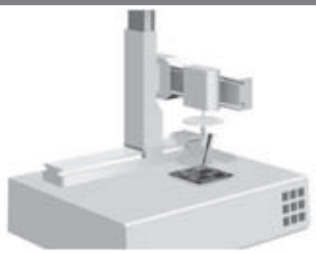

IA Line	ICSA2 ISA-SYM	Controller	X-SEL-K

Dispensing

XXXXX XXXXX

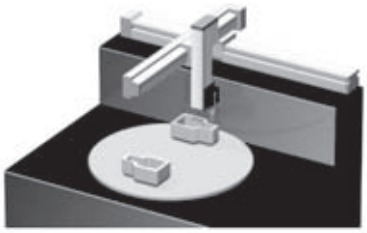

RC Line IA Line	RCS-R20 ICSA3	Controller	E-CON X-SEL-K

Screwdriving

Positioning

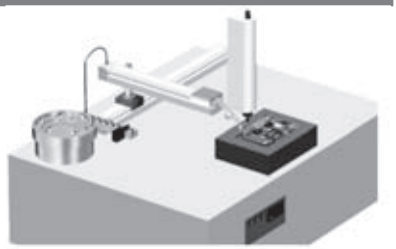

IA Line	ICSA2	Controller	X-SEL-K

Spraying/Coating

XXXX

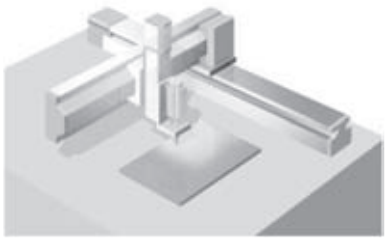

IA Line	ICSA3	Controller	X-SEL-K

Unloading

Positioning

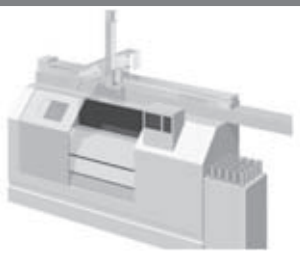

IA- Line	ICSA3	Controller	X-SEL-K

ICSA2-BA□H Cartesian Robot: X-Y 2-Axes Configuration, XYB (Y-Axis Base Mount) Type

ICSPA2-BA□H Cartesian Robot: X-Y 2-Axes Configuration, XYB (Y-Axis Base Mount) Type High-Precision Specification

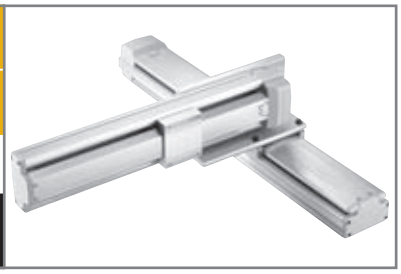

Type: XYB type

Stroke: X-axis: 100~600mm Y-axis: 100~400mm

Load capacity: 5.2kg ~ 3.1kg

■ Model specification items

Series	Type	Encoder type	X-axis stroke + options	Y-axis stroke + options	Applicable controller	Cable length	Cable management
ICSA2	– BA1H	– A	– 60AQLNM	– 40AQL	– T1	– 5L	– SC

* Refer to page 61 for the details of model specification items.

Models/Specifications

Model	Axis configuration		Encoder type	Motor output (W)	Lead (mm)	Stroke (mm) In increments of 100mm	Speed (mm/s)	Load capacity (Note 1)	Positioning repeatability (mm) (Note 2)
ICSA2 [ICSPA2] -BA□H-A-✻✻✻-✻✻✻-T1-△-○	X-axis	ISA [ISPA] -SXM-A-60-16-✻✻✻-T1	Absolute	60	16	100 ~ 600	1 ~ 800	5.2 ~ 3.1	±0.02 [±0.01]
	Y-axis	ISA [ISPA] -SYM-A-60-16-✻✻✻-T1				100 ~ 400			
ICSA2 [ICSPA2] -BA□H-I-✻✻✻-✻✻✻-T1-△-○	X-axis	ISA [ISPA] -SXM-I-60-16-✻✻✻-T1	Incremental			100 ~ 600			
	Y-axis	ISA [ISPA] -SYM-I-60-16-✻✻✻-T1				100 ~ 400			

* In the above model names, □ indicates the configuration direction, ✻✻✻ the stroke/applicable options (stroke is specified in centimeters), △ the cable length and ○ the wiring.

Options

Name	Code	Page	Remarks
AQ seal	AQ	➔ P13	
Brake	B	➔ P13	
Creep sensor	C	➔ P13	
Home limit switch	L	➔ P14	
Reverse homing specification	NM	➔ P14	
Guide with ball-retaining mechanism	RT	➔ P14	

Common Specifications

Drive system (Note 3)	Ball screw, rolled C10 [equivalent to rolled C5]
Backlash (Note 4)	0.05mm or less [0.02mm or less]
Guide	Integrated with base
Base	Material: Aluminum with white alumite treatment
Cable length (Note 5)	3L: 3m, 5L: 5m, □L : Length specification
Cable management	SC: Self-standing cable CT: Cable track

Load Capacity by Acceleration (kg)

Acceleration (G) \ Y-axis stroke (mm)	100	200	300	400
0.3	5.2	4.5	3.8	3.1
0.4	2.2	1.5	0.8	0.1
0.5	0.2			
0.6				
0.7				
0.8				
0.9				
1.0				

Maximum Speed by Stroke (mm/sec)

Axis \ Stroke (mm)	100 ~ 400	500 ~ 600
X-axis	800	
Y-axis	800	–

Configuration direction

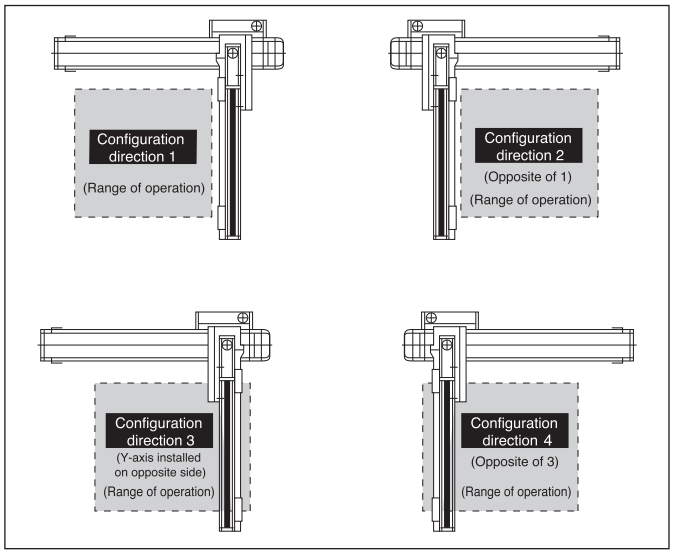

Applicable Controller Specifications

Applicable controller	Maximum number of controlled axes	Compatible encoder type	Program operation	Positioner operation	Pulse-train control	Supply voltage	Page
X-SEL(-P/Q)	4(6) axes	Absolute/incremental	○	△		AC100/230V	234
S-SEL	2 axes	Absolute/incremental	○	△		AC100/230V	-
S-/E-CON	1 axis	Absolute/incremental		○ / ○	○ / -	AC100/230V	- / 226

(Note 1) The load capacity assumes operation at the rated acceleration (0.3 G). The actuator can be operated at accelerations beyond the rated acceleration, but the load capacity will decrease (refer to the table of load capacity by acceleration).
(Notes 2, 3, 4) The figures in brackets apply to the ICSPA2.
(Note 5) The cable length measures from the X-axis connector box to the controller. The standard lengths are 3 m and 5 m, but other lengths can also be specified in meters up to 20 m (e.g., 10L = 10 m).

* Refer to page 59 for other points to note.

Self-standing Cable Specification (Cable Management Code: SC)

Dimensions

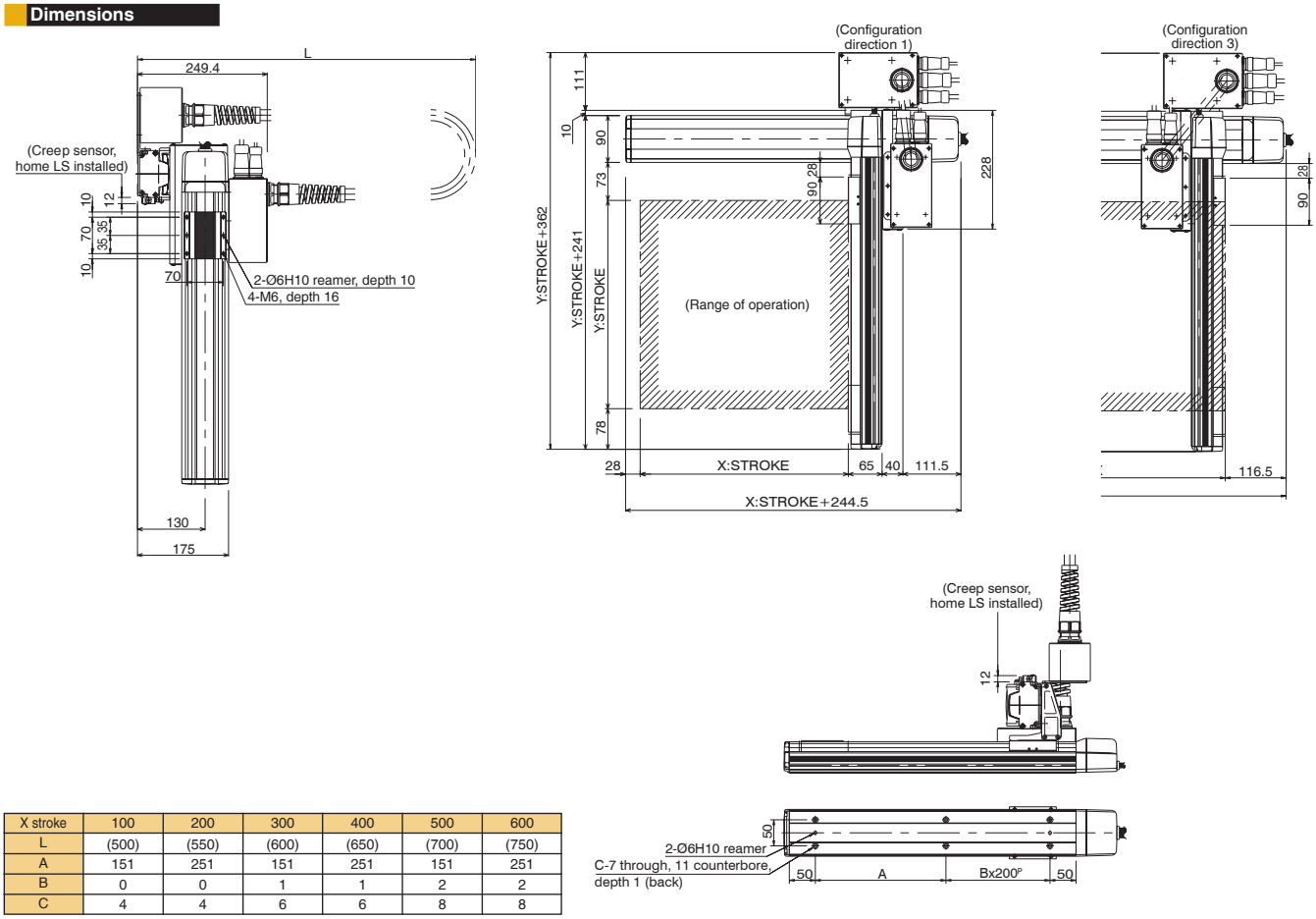

X stroke	100	200	300	400	500	600
L	(500)	(550)	(600)	(650)	(700)	(750)
A	151	251	151	251	151	251
B	0	0	1	1	2	2
C	4	4	6	6	8	8

Cable Track Specification (Cable Management Code: CT)

Dimensions

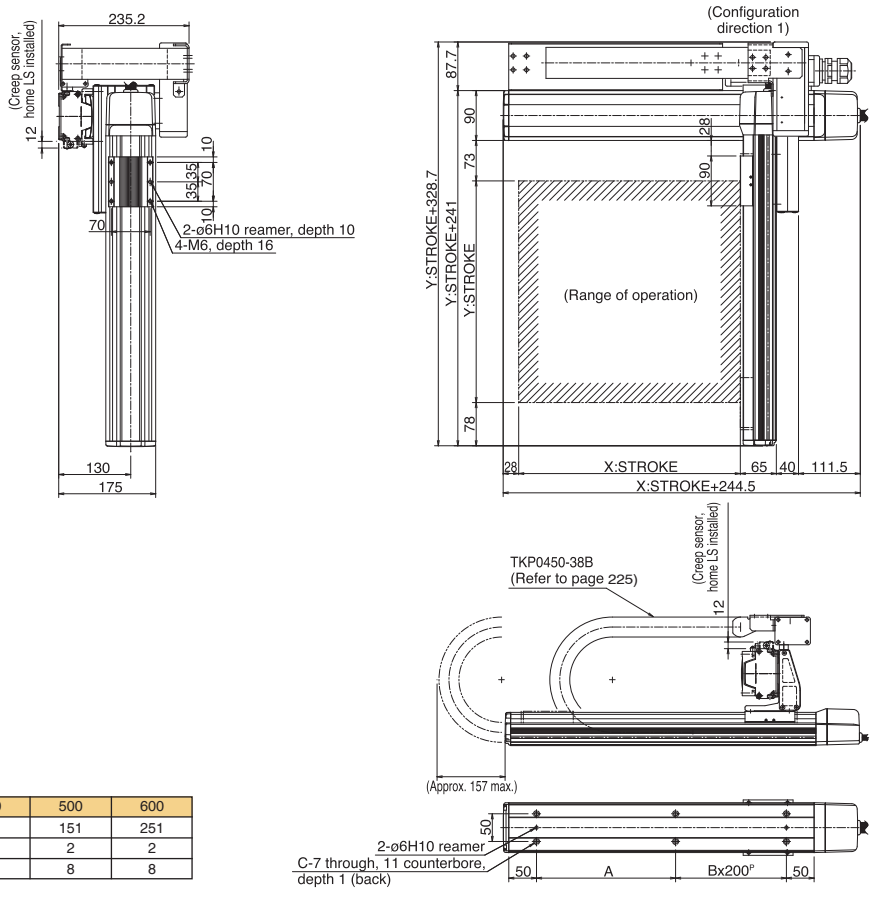

X stroke	100	200	300	400	500	600
A	151	251	151	251	151	251
B	0	0	1	1	2	2
C	4	4	6	6	8	8

ICSA2-BA□M Cartesian Robot: X-Y 2-Axes Configuration, XYB (Y-Axis Base Mount) Type

ICSPA2-BA□M Cartesian Robot: X-Y 2-Axes Configuration, XYB (Y-Axis Base Mount) Type High-Precision Specification

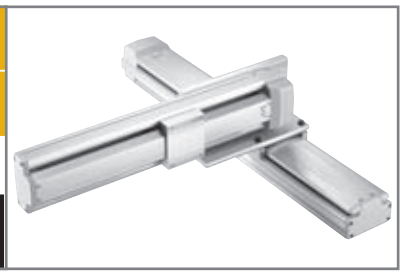

Type: XYB type

Stroke: X-axis: 100~600mm Y-axis: 100~400mm

Load capacity: 18.2kg ~ 8.1kg

■ Model specification items

Series	Type	Encoder type	X-axis stroke + options	Y-axis stroke + options	Applicable controller	Cable length	Cable management
ICSA2	BA1M	A	60AQLNM	40AQL	T1	5L	SC

* Refer to page 61 for the details of model specification items.

Models/Specifications

Model	Axis configuration		Encoder type	Motor output (W)	Lead (mm)	Stroke (mm) In increments of 100mm	Speed (mm/s)	Load capacity (Note 1)	Positioning repeatability (mm) (Note 2)
ICSA2 [ICSPA2] -BA□M-A-＊＊＊-＊＊＊-T1-△-○	X-axis	ISA [ISPA] -SXM-A-60-8-＊＊＊-T1	Absolute	60	8	100 ~ 600	1 ~ 400	18.2 ~ 8.1	±0.02 [±0.01]
	Y-axis	ISA [ISPA] -SYM-A-60-8-＊＊＊-T1				100 ~ 400			
ICSA2 [ICSPA2] -BA□M-I-＊＊＊-＊＊＊-T1-△-○	X-axis	ISA [ISPA] -SXM-I-60-8-＊＊＊-T1	Incremental			100 ~ 600			
	Y-axis	ISA [ISPA] -SYM-I-60-8-＊＊＊-T1				100 ~ 400			

* In the above model names, □ indicates the configuration direction, ＊＊＊ the stroke/applicable options (stroke is specified in centimeters), △ the cable length and ○ the wiring.

Options

Name	Code	Page	Remarks
AQ seal	AQ	➔ P13	
Brake	B	➔ P13	
Creep sensor	C	➔ P13	
Home limit switch	L	➔ P14	
Reverse homing specification	NM	➔ P14	
Guide with ball-retaining mechanism	RT	➔ P14	

Common Specifications

Drive system (Note 3)	Ball screw, rolled C10 [equivalent to rolled C5]
Backlash (Note 4)	0.05mm or less [0.02mm or less]
Guide	Integrated with base
Base	Material: Aluminum with white alumite treatment
Cable length (Note 5)	3L: 3m, 5L: 5m, □L : Length specification
Cable management	SC: Self-standing cable CT: Cable track

Load Capacity by Acceleration (kg)

Acceleration (G) \ Y-axis stroke (mm)	100	200	300	400
0.3	18.2	16.6	12.1	8.1
0.4	11.7	11	10.3	8.1
0.5	8.2	7.5	6.8	6.1
0.6	5.2	4.5	3.8	3.1
0.7				
0.8				
0.9				
1.0				

Maximum Speed by Stroke (mm/sec)

Axis \ Stroke (mm)	100 ~ 400	500 ~ 600
X-axis	400	
Y-axis	400	Ð

Configuration direction

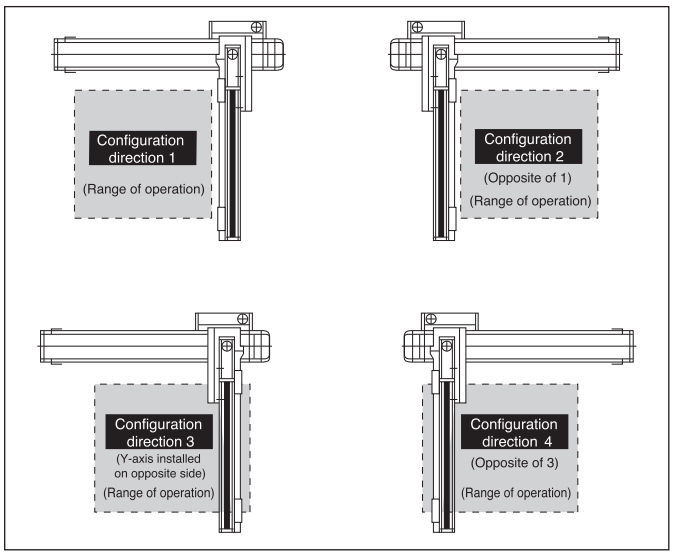

Applicable Controller Specifications

Applicable controller	Maximum number of controlled axes	Compatible encoder type	Program operation	Positioner operation	Pulse-train control	Supply voltage	Page
X-SEL(-P/Q)	4(6) axes	Absolute/incremental	○	△		AC100/230V	234
S-SEL	2 axes	Absolute/incremental	○	△		AC100/230V	-
S-/E-CON	1 axis	Absolute/incremental		○ / ○	○ / -	AC100/230V	- / 226

Caution

(Note 1) The load capacity assumes operation at the rated acceleration (0.3 G). The actuator can be operated at accelerations beyond the rated acceleration, but the load capacity will decrease (refer to the table of load capacity by acceleration).
(Notes 2, 3, 4) The figures in brackets apply to the ICSPA2.
(Note 5) The cable length measures from the X-axis connector box to the controller. The standard lengths are 3 m and 5 m, but other lengths can also be specified in meters up to 20 m (e.g., 10L = 10 m).

* Refer to page 59 for other points to note.

Self-standing Cable Specification (Cable Management Code: SC)

Dimensions

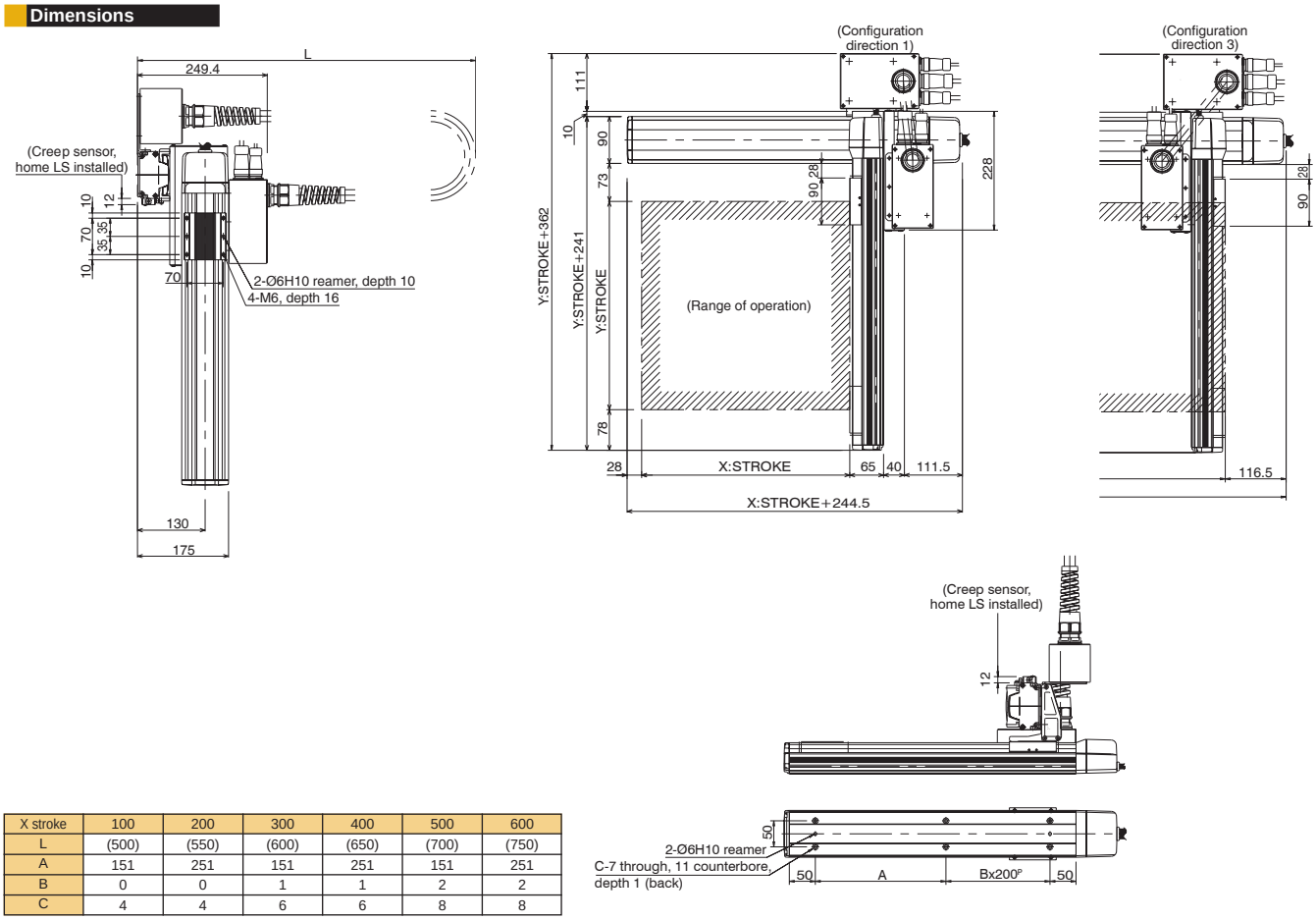

X stroke	100	200	300	400	500	600
L	(500)	(550)	(600)	(650)	(700)	(750)
A	151	251	151	251	151	251
B	0	0	1	1	2	2
C	4	4	6	6	8	8

Cable Track Specification (Cable Management Code: CT)

Dimensions

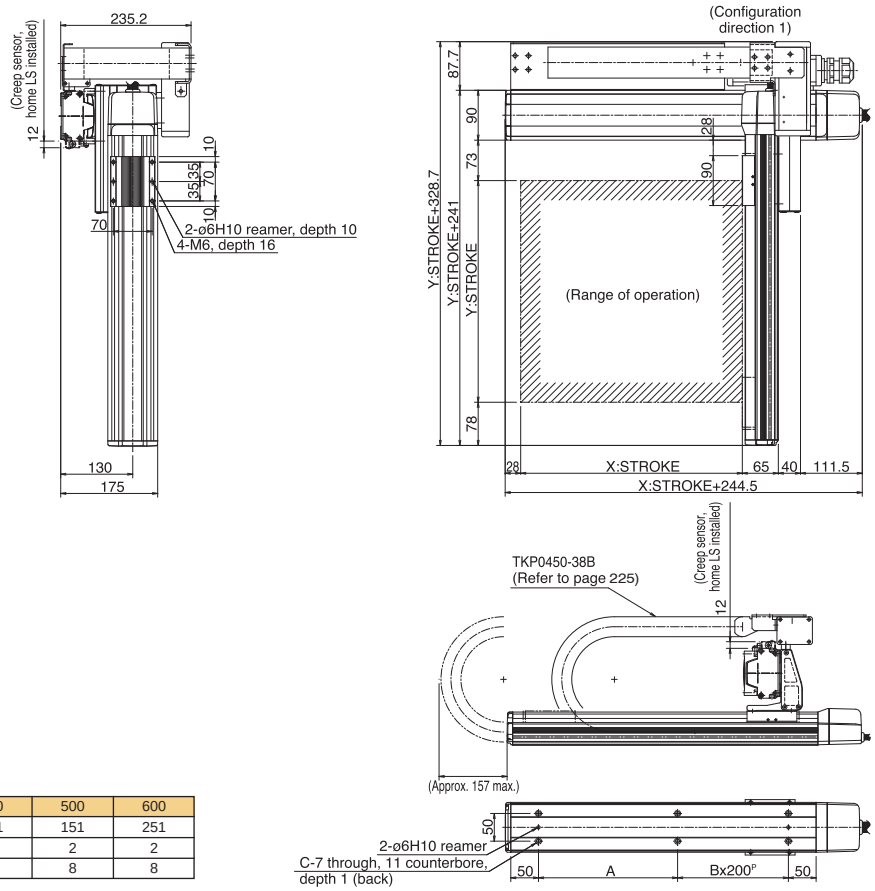

X stroke	100	200	300	400	500	600
A	151	251	151	251	151	251
B	0	0	1	1	2	2
C	4	4	6	6	8	8

ICSA2-BB□H Cartesian Robot: X-Y 2-Axes Configuration, XYB (Y-Axis Base Mount) Type

ICSPA2-BB□H Cartesian Robot: X-Y 2-Axes Configuration, XYB (Y-Axis Base Mount) Type High-Precision Specification

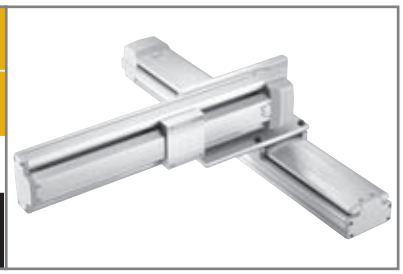

Type	Stroke	Load capacity
XYB type	X-axis: 200~800mm Y-axis: 100~400mm	12kg ~ 11.1kg

■ Model specification items

Series	Type	Encoder type	X-axis stroke + options	Y-axis stroke + options	Applicable controller	Cable length	Cable management
ICSA2	BB1H	A	80AQLNM	40AQL	T1	5L	SC

* Refer to page 61 for the details of model specification items.

Models/Specifications

Model	Axis configuration		Encoder type	Motor output (W)	Lead (mm)	Stroke (mm) In increments of 100mm	Speed (mm/s) (Note 1)	Load capacity (Note 2)	Positioning repeatability (mm) (Note 3)
ICSA2 [ICSPA2] -BB□H-A-＊＊＊-＊＊＊-T1-△-○	X-axis	ISA [ISPA] -MXM-A-100-20-＊＊＊-T1	Absolute	100	20	200 ~ 800	1 ~ 1000	12 ~ 11.1	±0.02 [±0.01]
	Y-axis	ISA [ISPA] -SXM-A-60-16-＊＊＊-T1		60	16	100 ~ 400	1 ~ 800		
ICSA2 [ICSPA2] -BB□H-I-＊＊＊-＊＊＊-T1-△-○	X-axis	ISA [ISPA] -MXM-I-100-20-＊＊＊-T1	Incremental	100	20	200 ~ 800	1 ~ 1000		
	Y-axis	ISA [ISPA] -SXM-I-60-16-＊＊＊-T1		60	16	100 ~ 400	1 ~ 800		

* In the above model names, □ indicates the configuration direction, ＊＊＊ the stroke/applicable options (stroke is specified in centimeters), △ the cable length and ○ the wiring.

Options

Name	Code	Page	Remarks
AQ seal	AQ	➔ P13	
Brake	B	➔ P13	
Creep sensor	C	➔ P13	
Home limit switch	L	➔ P14	
Reverse homing specification	NM	➔ P14	
Guide with ball-retaining mechanism	RT	➔ P14	

Common Specifications

Drive system (Note 4)	Ball screw, rolled C10 [equivalent to rolled C5]
Backlash (Note 5)	0.05mm or less [0.02mm or less]
Guide	Integrated with base
Base	Material: Aluminum with white alumite treatment
Cable length (Note 6)	3L: 3m, 5L: 5m, □L : Length specification
Cable management	SC: Self-standing cable CT: Cable track

Load Capacity by Acceleration (kg)

Acceleration (G) \ Y-axis stroke (mm)	100	200	300	400
0.3	12.0	12.0	11.8	11.1
0.4	8.2	7.5	6.8	6.1
0.5	5.2	4.5	3.8	3.1
0.6	3.2	2.5	1.8	1.1
0.7	1.7	1.0	0.3	
0.8	0.7			
0.9				
1.0				

Maximum Speed by Stroke (mm/sec)

Axis \ Stroke (mm)	100	200 ~ 400	500 ~ 700	800
X-axis	–	1000		795
Y-axis	800		–	–

Configuration direction

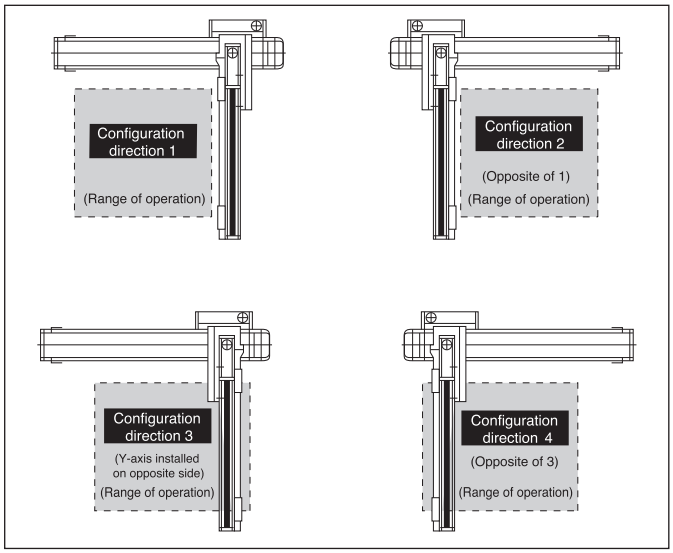

Applicable Controller Specifications

Applicable controller	Maximum number of controlled axes	Compatible encoder type	Program operation	Positioner operation	Pulse-train control	Supply voltage	Page
X-SEL(-P/Q)	4(6) axes	Absolute/incremental	○	△		AC100/230V	234
S-SEL	2 axes	Absolute/incremental	○	△		AC100/230V	-
S-/E-CON	1 axis	Absolute/incremental		○ / ○	○ / -	AC100/230V	- / 226

Caution

(Note 1) The maximum speed will vary depending on the stroke. (Refer to the table of maximum speed by stroke.)
(Note 2) The load capacity assumes operation at the rated acceleration (0.3 G). The actuator can be operated at accelerations beyond the rated acceleration, but the load capacity will decrease (refer to the table of load capacity by acceleration).
(Notes 3, 4, 5) The figures in brackets apply to the ICSPA2.
(Note 6) The cable length measures from the X-axis connector box to the controller. The standard lengths are 3 m and 5 m, but other lengths can also be specified in meters up to 20 m (e.g., 10L = 10 m).

* Refer to page 59 for other points to note.

Self-standing Cable Specification (Cable Management Code: SC)

Dimensions

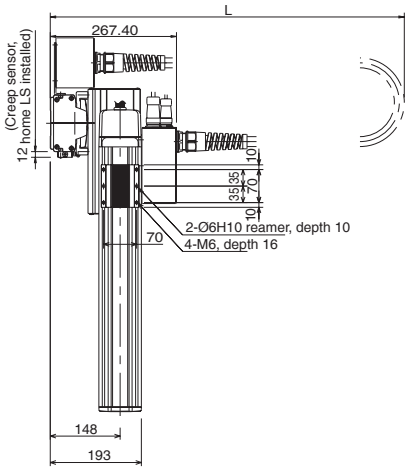

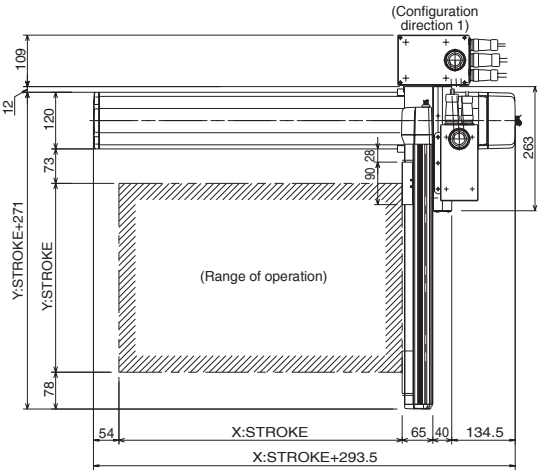

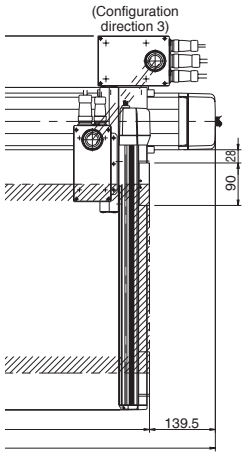

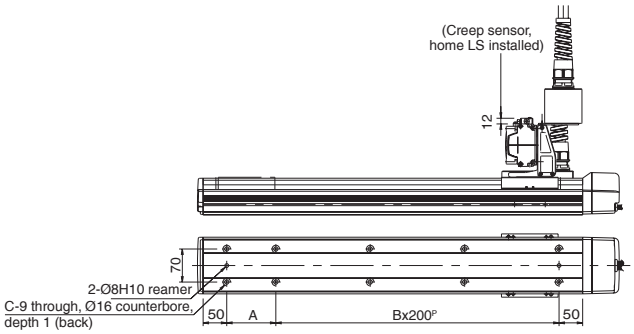

X stroke	200	300	400	500	600	700	800
L	(550)	(600)	(650)	(700)	(750)	(800)	(850)
A	104	204	104	204	104	204	104
B	1	1	2	2	3	3	4
C	6	6	8	8	10	10	12

Cable Track Specification (Cable Management Code: CT)

Dimensions

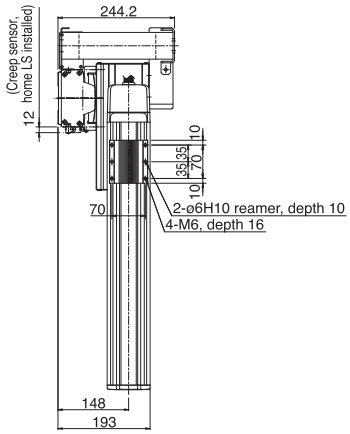

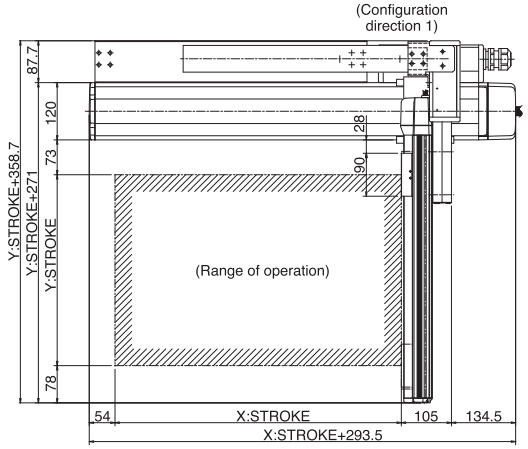

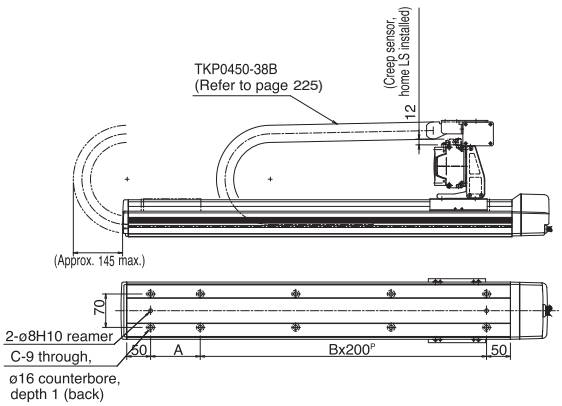

X stroke	200	300	400	500	600	700	800
A	104	204	104	204	104	204	104
B	1	1	2	2	3	3	4
C	6	6	8	8	10	10	12

ICSA2-BB□M
Cartesian Robot: X-Y 2-Axes Configuration, XYB (Y-Axis Base Mount) Type

ICSPA2-BB□M
Cartesian Robot: X-Y 2-Axes Configuration, XYB (Y-Axis Base Mount) Type High-Precision Specification

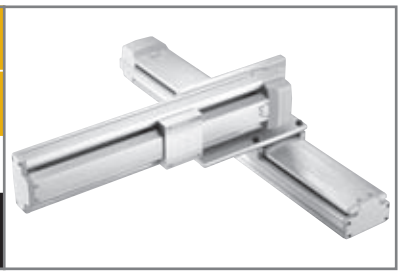

Type: XYB type

Stroke: X-axis: 200~800mm Y-axis: 100~400mm

Load capacity: 25kg ~ 21.8kg

■ Model specification items

Series	Type	Encoder type	X-axis stroke + options	Y-axis stroke + options	Applicable controller	Cable length	Cable management
ICSA2	BB1M	A	80AQLNM	40AQL	T1	5L	SC

* Refer to page 61 for the details of model specification items.

Models/Specifications

Model	Axis configuration		Encoder type	Motor output (W)	Lead (mm)	Stroke (mm) In increments of 100mm	Speed (mm/s) (Note 1)	Load capacity (Note 2)	Positioning repeatability (mm) (Note 3)
ICSA2 [ICSPA2] -BB□M-A-✻✻✻-✻✻✻-T1-△-○	X-axis	ISA [ISPA] -MXM-A-100-10-✻✻✻-T1	Absolute	100	10	200 ~ 800	1 ~ 500	25 ~ 21.8	±0.02 [±0.01]
	Y-axis	ISA [ISPA] -SYM-A-60-8-✻✻✻-T1		60	8	100 ~ 400	1 ~ 400		
ICSA2 [ICSPA2] -BB□M-I-✻✻✻-✻✻✻-T1-△-○	X-axis	ISA [ISPA] -MXM-I-100-10-✻✻✻-T1	Incremental	100	10	200 ~ 800	1 ~ 500		
	Y-axis	ISA [ISPA] -SYM-I-60-8-✻✻✻-T1		60	8	100 ~ 400	1 ~ 400		

* In the above model names, □ indicates the configuration direction, ✻✻✻ the stroke/applicable options (stroke is specified in centimeters), △ the cable length and ○ the wiring.

Options

Name	Code	Page	Remarks
AQ seal	AQ	➔ P13	
Brake	B	➔ P13	
Creep sensor	C	➔ P13	
Home limit switch	L	➔ P14	
Reverse homing specification	NM	➔ P14	
Guide with ball-retaining mechanism	RT	➔ P14	

Common Specifications

Drive system (Note 4)	Ball screw, rolled C10 [equivalent to rolled C5]
Backlash (Note 5)	0.05mm or less [0.02mm or less]
Guide	Integrated with base
Base	Material: Aluminum with white alumite treatment
Cable length (Note 6)	3L: 3m, 5L: 5m, □L : Length specification
Cable management	SC: Self-standing cable CT: Cable track

Load Capacity by Acceleration (kg)

Acceleration (G) \ Y-axis stroke (mm)	100	200	300	400
0.3	25.0	25.0	25.0	21.8
0.4	18.5	18.5	18.5	18.5
0.5	15.0	15.0	15.0	15.0
0.6	12.0	12.0	11.8	11.1
0.7				
0.8				
0.9				
1.0				

Maximum Speed by Stroke (mm/sec)

Axis \ Stroke (mm)	100	200 ~ 400	500 ~ 600	700	800
X-axis	–	500		480	380
Y-axis	400		–	–	–

Configuration direction

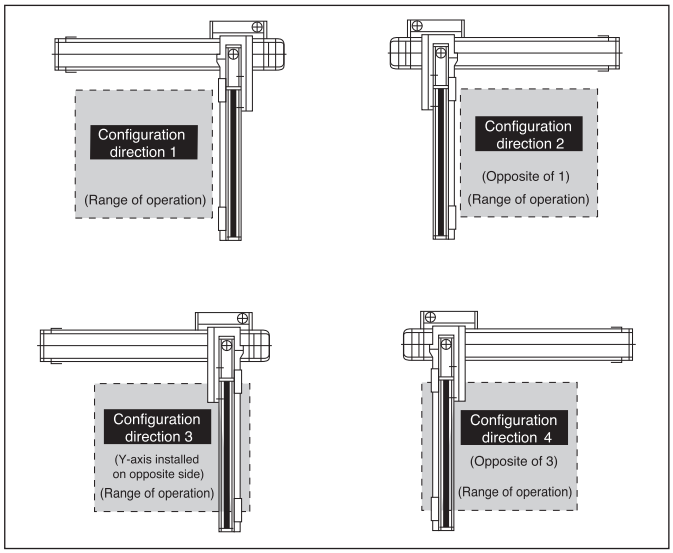

Applicable Controller Specifications

Applicable controller	Maximum number of controlled axes	Compatible encoder type	Program operation	Positioner operation	Pulse-train control	Supply voltage	Page
X-SEL(-P/Q)	4(6) axes	Absolute/incremental	○	△		AC100/230V	234
S-SEL	2 axes	Absolute/incremental	○	△		AC100/230V	-
S-/E-CON	1 axis	Absolute/incremental		○ / ○	○ / -	AC100/230V	- / 226

Caution

(Note 1) The maximum speed will vary depending on the stroke. (Refer to the table of maximum speed by stroke.)
(Note 2) The load capacity assumes operation at the rated acceleration (0.3 G). The actuator can be operated at accelerations beyond the rated acceleration, but the load capacity will decrease (refer to the table of load capacity by acceleration).
(Notes 3, 4, 5) The figures in brackets apply to the ICSPA2.
(Note 6) The cable length measures from the X-axis connector box to the controller. The standard lengths are 3 m and 5 m, but other lengths can also be specified in meters up to 20 m (e.g., 10L = 10 m).

* Refer to page 59 for other points to note.

Self-standing Cable Specification (Cable Management Code: SC)

Dimensions

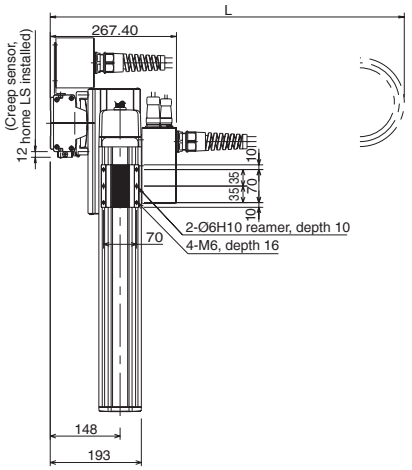

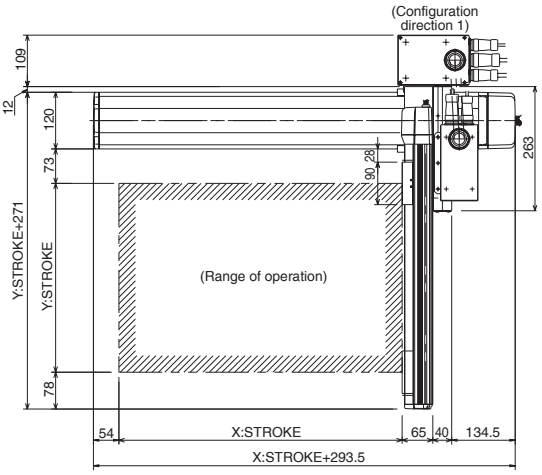

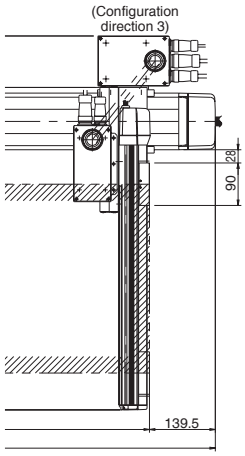

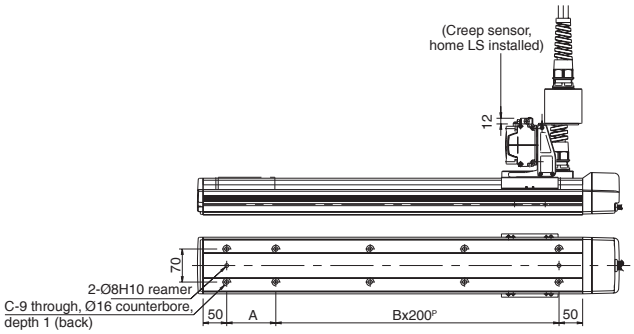

X stroke	200	300	400	500	600	700	800
L	(550)	(600)	(650)	(700)	(750)	(800)	(850)
A	104	204	104	204	104	204	104
B	1	1	2	2	3	3	4
C	6	6	8	8	10	10	12

Cable Track Specification (Cable Management Code: CT)

Dimensions

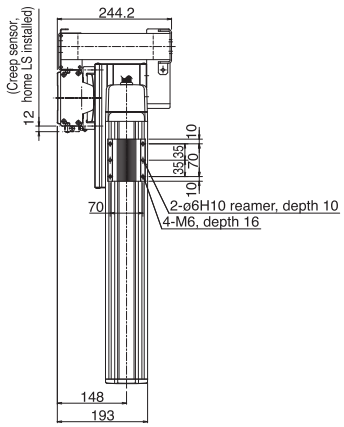

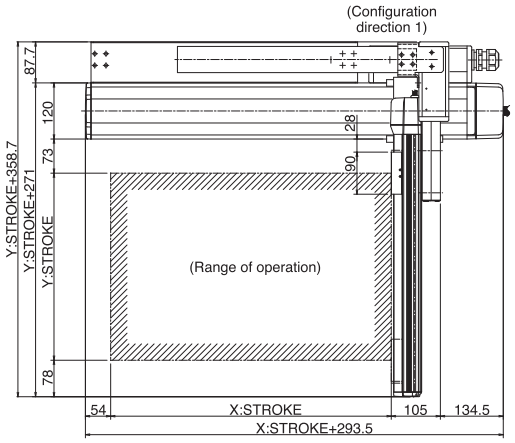

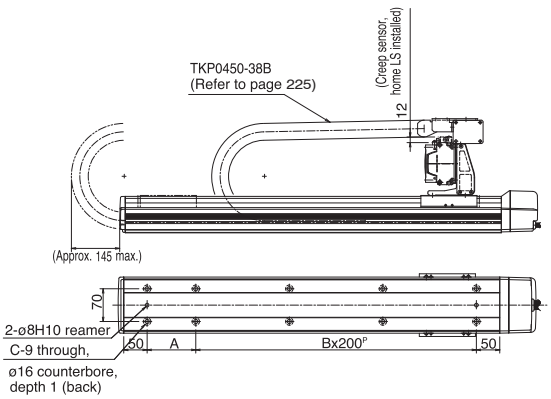

X stroke	200	300	400	500	600	700	800
A	104	204	104	204	104	204	104
B	1	1	2	2	3	3	4
C	6	6	8	8	10	10	12

ICSA2-BC□H
Cartesian Robot: X-Y 2-Axes Configuration, XYB (Y-Axis Base Mount) Type

ICSPA2-BC□H
Cartesian Robot: X-Y 2-Axes Configuration, XYB (Y-Axis Base Mount) Type High-Precision Specification

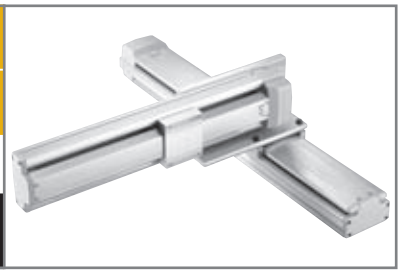

Type: XYB type

Stroke: X-axis: 200~800mm Y-axis: 100~500mm

Load capacity: 20kg ~ 18.7kg

■ Model specification items

Series	Type	Encoder type	X-axis stroke + options	Y-axis stroke + options	Applicable controller	Cable length	Cable management
ICSA2	– BC1H	– A	– 80AQLNM	– 50AQL	– T1	– 5L	– SC

* Refer to page 61 for the details of model specification items.

Models/Specifications

Model	Axis configuration		Encoder type	Motor output (W)	Lead (mm)	Stroke (mm) In increments of 100mm	Speed (mm/s) (Note 1)	Load capacity (Note 2)	Positioning repeatability (mm) (Note 3)
ICSA2 [ICSPA2] -BC□H-A-✻✻✻-✻✻✻-T1-△-○	X-axis	ISA [ISPA] -MXM-A-200-20-✻✻✻-T1	Absolute	200	20	200 ~ 800	1 ~ 1000	20 ~ 18.7	±0.02 [±0.01]
	Y-axis	ISA [ISPA] -MYM-A-100-20-✻✻✻-T1		100		100 ~ 500			
ICSA2 [ICSPA2] -BC□H-I-✻✻✻-✻✻✻-T1-△-○	X-axis	ISA [ISPA] -MXM-I-200-20-✻✻✻-T1	Incremental	200		200 ~ 800			
	Y-axis	ISA [ISPA] -MYM-I-100-20-✻✻✻-T1		100		100 ~ 500			

* In the above model names, □ indicates the configuration direction, ✻✻✻ the stroke/applicable options (stroke is specified in centimeters), △ the cable length and ○ the wiring.

Options

Name	Code	Page	Remarks
AQ seal	AQ	➔ P13	
Brake	B	➔ P13	
Creep sensor	C	➔ P13	
Home limit switch	L	➔ P14	
Reverse homing specification	NM	➔ P14	
Guide with ball-retaining mechanism	RT	➔ P14	

Common Specifications

Drive system (Note 4)	Ball screw, rolled C10 [equivalent to rolled C5]
Backlash (Note 5)	0.05mm or less [0.02mm or less]
Guide	Integrated with base
Base	Material: Aluminum with white alumite treatment
Cable length (Note 6)	3L: 3m, 5L: 5m, □L : Length specification
Cable management	SC: Self-standing cable CT: Cable track

Load Capacity by Acceleration (kg)

Acceleration (G) \ Y-axis stroke (mm)	100	200	300	400	500
0.3	20.0	20.0	20.0	20.0	18.7
0.4	15.0	15.0	15.0	15.0	14.8
0.5	12.0	11.8	10.8	9.8	8.8
0.6	8.8	7.8	6.8	5.8	4.8
0.7	5.8	4.8	3.8	2.8	1.8
0.8	3.8	2.8	1.8	0.8	
0.9	2.3	1.3	0.3		
1.0	0.8				

Maximum Speed by Stroke (mm/sec)

Axis \ Stroke (mm)	100	200 ~ 500	600 ~ 700	800
X-axis	–	1000		795
Y-axis	1000		–	–

Configuration direction

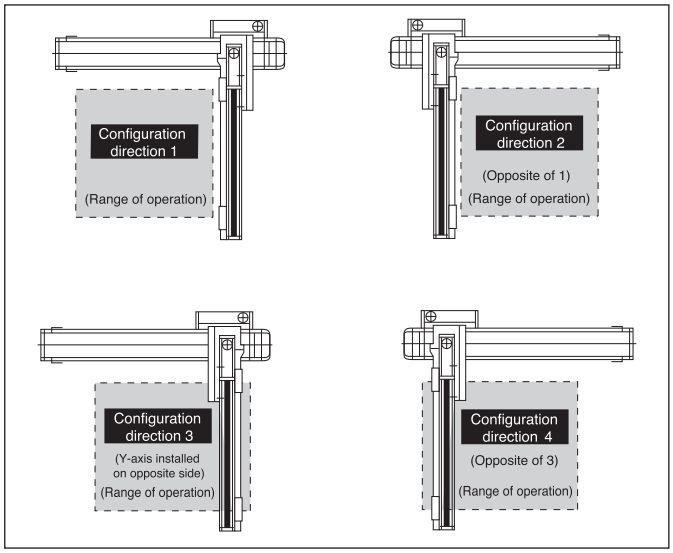

Applicable Controller Specifications

Applicable controller	Maximum number of controlled axes	Compatible encoder type	Program operation	Positioner operation	Pulse-train control	Supply voltage	Page
X-SEL(-P/Q)	4(6) axes	Absolute/incremental	○	△		AC100/230V	234
S-SEL	2 axes	Absolute/incremental	○	△		AC100/230V	-
S-/E-CON	1 axis	Absolute/incremental		○ / ○	○ / -	AC100/230V	- / 226

Caution

(Note 1) The maximum speed will vary depending on the stroke. (Refer to the table of maximum speed by stroke.)
(Note 2) The load capacity assumes operation at the rated acceleration (0.3 G). The actuator can be operated at accelerations beyond the rated acceleration, but the load capacity will decrease (refer to the table of load capacity by acceleration).
(Notes 3, 4, 5) The figures in brackets apply to the ICSPA2.
(Note 6) The cable length measures from the X-axis connector box to the controller. The standard lengths are 3 m and 5 m, but other lengths can also be specified in meters up to 20 m (e.g., 10L = 10 m).

* Refer to page 59 for other points to note.

Self-standing Cable Specification (Cable Management Code: SC)

Dimensions

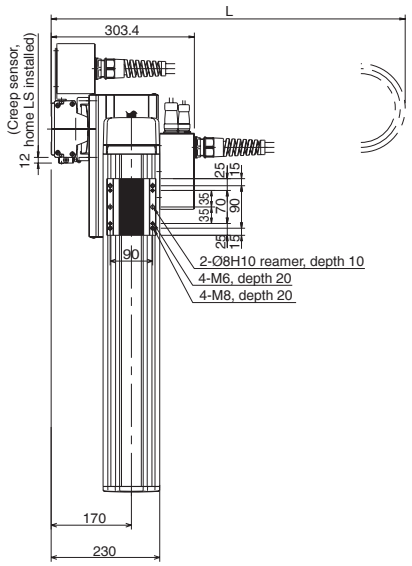

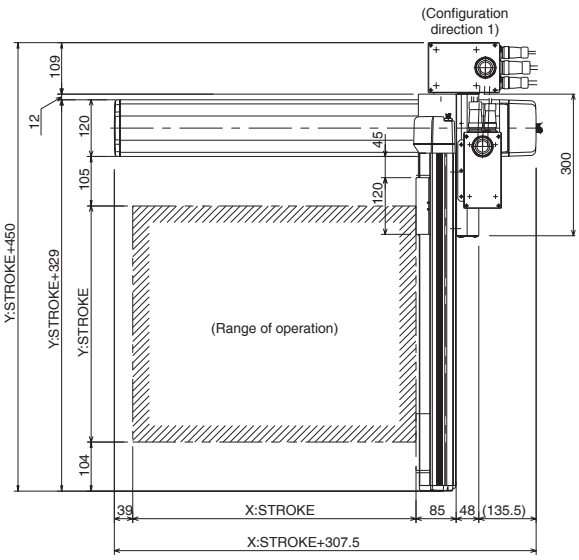

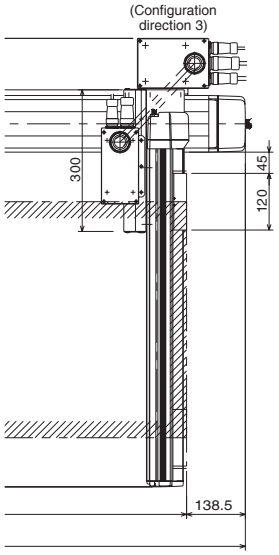

X stroke	200	300	400	500	600	700	800
L	(550)	(600)	(650)	(700)	(750)	(800)	(850)
A	104	204	104	204	104	204	104
B	1	1	2	2	3	3	4
C	6	6	8	8	10	10	12

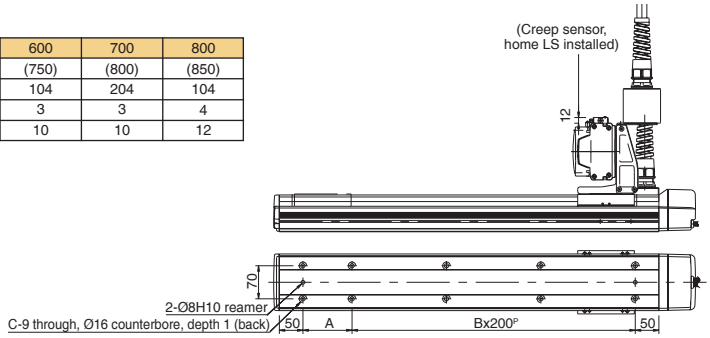

Cable Track Specification (Cable Management Code: CT)

Dimensions

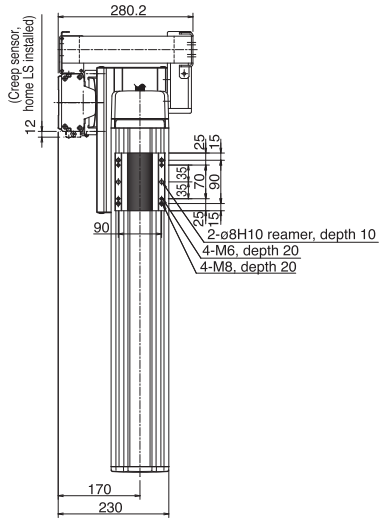

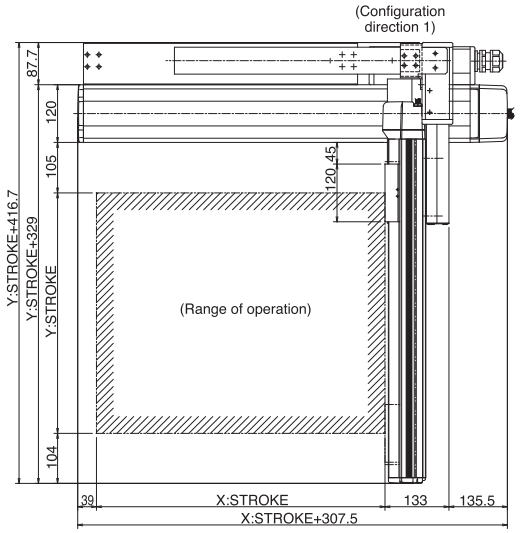

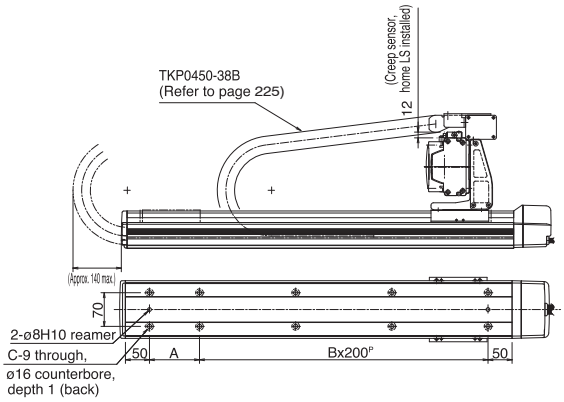

X stroke	200	300	400	500	600	700	800
A	104	204	104	204	104	204	104
B	1	1	2	2	3	3	4
C	6	6	8	8	10	10	12

ICSA2-BC□M
Cartesian Robot: X-Y 2-Axes Configuration, XYB (Y-Axis Base Mount) Type

ICSPA2-BC□M
Cartesian Robot: X-Y 2-Axes Configuration, XYB (Y-Axis Base Mount) Type High-Precision Specification

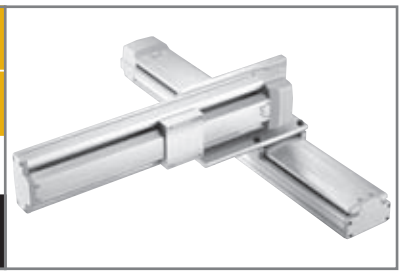

Type	Stroke	Load capacity
XYB type	X-axis: 200~800mm Y-axis: 100~500mm	28.8kg ~ 18.7kg

■ Model specification items

Series	Type	Encoder type	X-axis stroke + options	Y-axis stroke + options	Applicable controller	Cable length	Cable management
ICSA2	BC1M	A	80AQLNM	50AQL	T1	5L	SC

* Refer to page 61 for the details of model specification items.

Models/Specifications

Model	Axis configuration		Encoder type	Motor output (W)	Lead (mm)	Stroke (mm) In increments of 100mm	Speed (mm/s) (Note 1)	Load capacity (Note 2)	Positioning repeatability (mm) (Note 3)
ICSA2 [ICSPA2] -BC□M-A-✻✻✻-✻✻✻-T1-△-○	X-axis	ISA [ISPA] -MXM-A-100-10-✻✻✻-T1	Absolute	100	10	200 ~ 800	1 ~ 500	28.8 ~ 18.7	±0.02 [±0.01]
	Y-axis	ISA [ISPA] -MYM-A-100-10-✻✻✻-T1				100 ~ 500			
ICSA2 [ICSPA2] -BC□M-I-✻✻✻-✻✻✻-T1-△-○	X-axis	ISA [ISPA] -MXM-I-100-10-✻✻✻-T1	Incremental			200 ~ 800			
	Y-axis	ISA [ISPA] -MYM-I-100-10-✻✻✻-T1				100 ~ 500			

* In the above model names, □ indicates the configuration direction, ✻✻✻ the stroke/applicable options (stroke is specified in centimeters), △ the cable length and ○ the wiring.

Options

Name	Code	Page	Remarks
AQ seal	AQ	➔ P13	
Brake	B	➔ P13	
Creep sensor	C	➔ P13	
Home limit switch	L	➔ P14	
Reverse homing specification	NM	➔ P14	
Guide with ball-retaining mechanism	RT	➔ P14	

Common Specifications

Drive system (Note 4)	Ball screw, rolled C10 [equivalent to rolled C5]
Backlash (Note 5)	0.05mm or less [0.02mm or less]
Guide	Integrated with base
Base	Material: Aluminum with white alumite treatment
Cable length (Note 6)	3L: 3m, 5L: 5m, □L : Length specification
Cable management	SC: Self-standing cable CT: Cable track

Load Capacity by Acceleration (kg)

Acceleration (G) \ Y-axis stroke (mm)	100	200	300	400	500
0.3	28.8	27.8	26.8	21.8	18.7
0.4	18.8	17.8	16.8	15.8	14.8
0.5	12.8	11.8	10.8	9.8	8.8
0.6	8.8	7.8	6.8	5.8	4.8
0.7					
0.8					
0.9					
1.0					

Maximum Speed by Stroke (mm/sec)

Axis \ Stroke (mm)	100	200 ~ 500	600	700	800
X-axis	–	500		480	380
Y-axis	500		–	–	–

Configuration direction

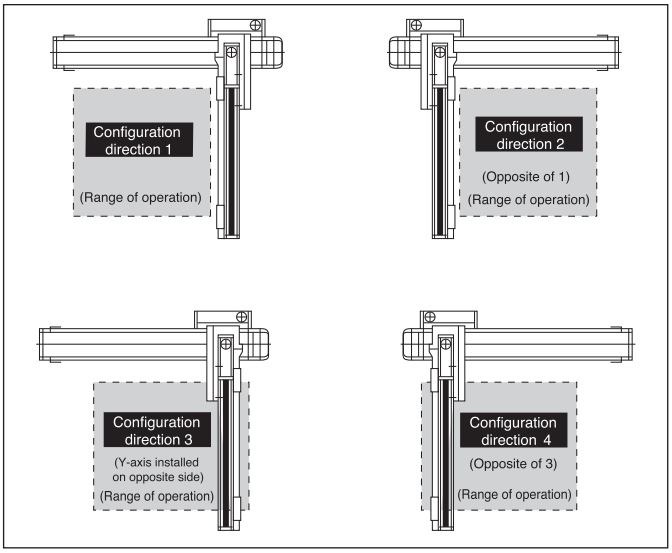

Applicable Controller Specifications

Applicable controller	Maximum number of controlled axes	Compatible encoder type	Program operation	Positioner operation	Pulse-train control	Supply voltage	Page
X-SEL(-P/Q)	4(6) axes	Absolute/incremental	○	△		AC100/230V	234
S-SEL	2 axes	Absolute/incremental	○	△		AC100/230V	-
S-/E-CON	1 axis	Absolute/incremental		○ / ○	○ / -	AC100/230V	- / 226

Caution

(Note 1) The maximum speed will vary depending on the stroke. (Refer to the table of maximum speed by stroke.)
(Note 2) The load capacity assumes operation at the rated acceleration (0.3 G). The actuator can be operated at accelerations beyond the rated acceleration, but the load capacity will decrease (refer to the table of load capacity by acceleration).
(Notes 3, 4, 5) The figures in brackets apply to the ICSPA2.
(Note 6) The cable length measures from the X-axis connector box to the controller. The standard lengths are 3 m and 5 m, but other lengths can also be specified in meters up to 20 m (e.g., 10L = 10 m).

* Refer to page 59 for other points to note.

Self-standing Cable Specification (Cable Management Code: SC)

Dimensions

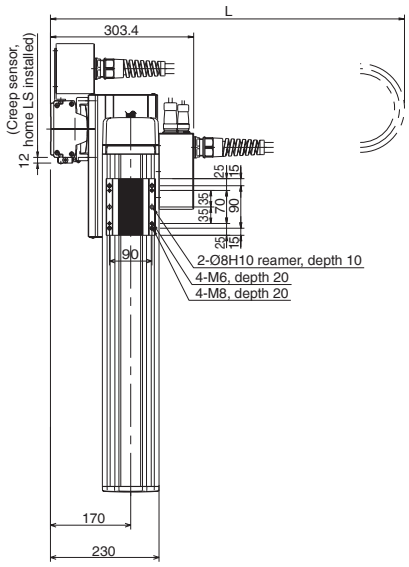

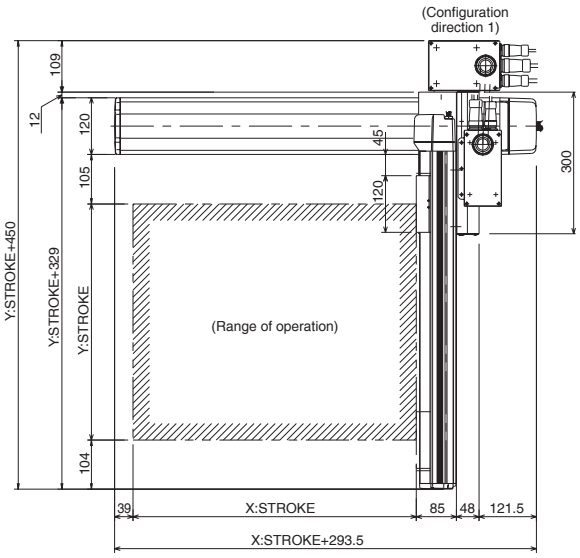

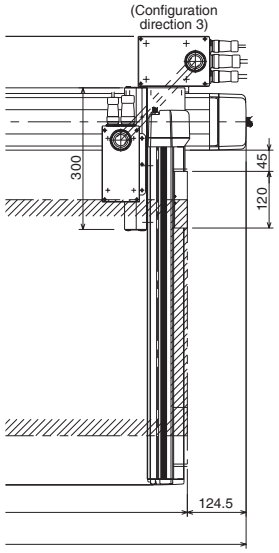

X stroke	200	300	400	500	600	700	800
L	(550)	(600)	(650)	(700)	(750)	(800)	(850)
A	104	204	104	204	104	204	104
B	1	1	2	2	3	3	4
C	6	6	8	8	10	10	12

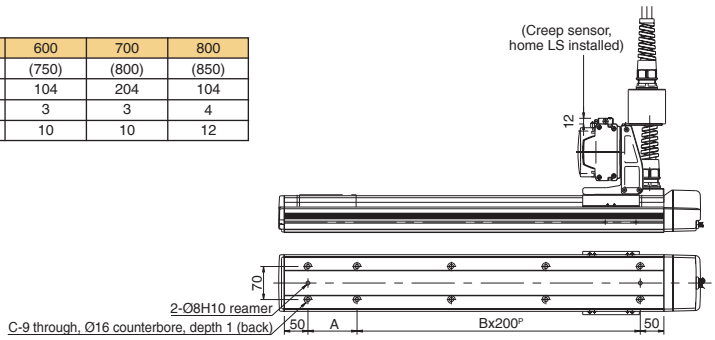

Cable Track Specification (Cable Management Code: CT)

Dimensions

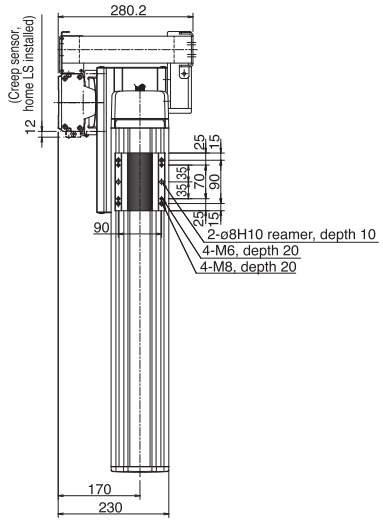

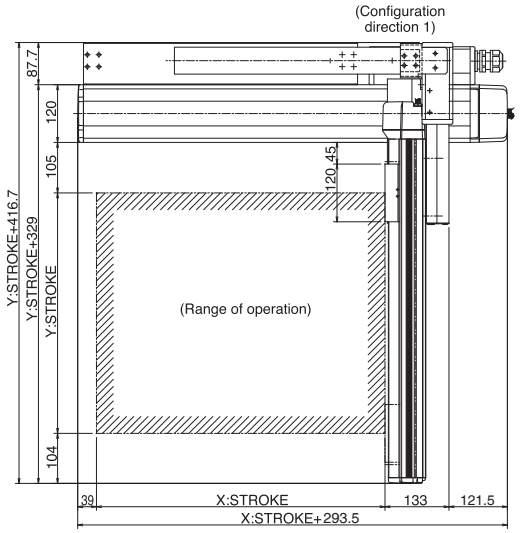

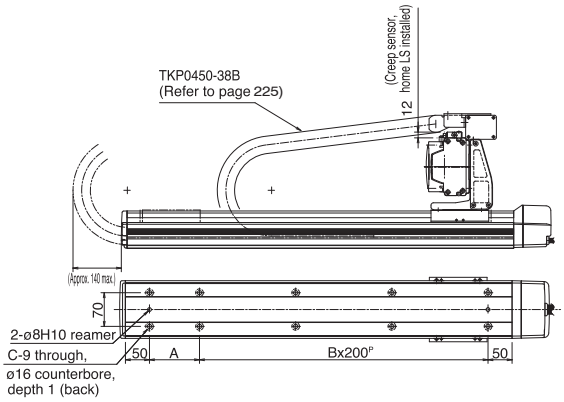

X stroke	200	300	400	500	600	700	800
A	104	204	104	204	104	204	104
B	1	1	2	2	3	3	4
C	6	6	8	8	10	10	12

ICSA2-BD□H Cartesian Robot: X-Y 2-Axes Configuration, XYB (Y-Axis Base Mount) Type

ICSPA2-BD□H Cartesian Robot: X-Y 2-Axes Configuration, XYB (Y-Axis Base Mount) Type High-Precision Specification

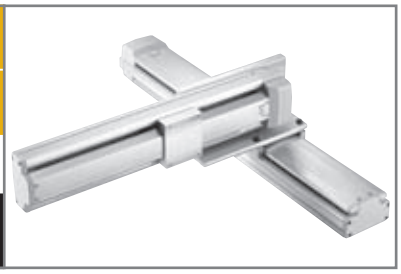

Type	Stroke	Load capacity
XYB type	X-axis: 800~2000mm Y-axis: 100~500mm	20kg ~ 18.7kg

■ Model specification items

Series	Type	Encoder type	X-axis stroke + options	Y-axis stroke + options	Applicable controller	Cable length	Cable management
ICSA2	– BD1M	– A	– 200AQLNM	– 50AQL	– T1	– 5L	– CT

* Refer to page 61 for the details of model specification items.

Models/Specifications

Model	Axis configuration		Encoder type	Motor output (W)	Lead (mm)	Stroke (mm) In increments of 100mm	Speed (mm/s) (Note 1)	Load capacity (Note 2)	Positioning repeatability (mm) (Note 3)
ICSA2 [ICSPA2] -BD□H-A-✻✻✻-✻✻✻-T1-△-○	X-axis	ISA [ISPA] -MXMX-A-200-20-✻✻✻-T1	Absolute	200	20	800 ~ 2000	1 ~ 1000	20 ~ 18.7	±0.02 [±0.01]
	Y-axis	ISA [ISPA] -MYM-A-100-20-✻✻✻-T1		100		100 ~ 500			
ICSA2 [ICSPA2] -BD□H-I-✻✻✻-✻✻✻-T1-△-○	X-axis	ISA [ISPA] -MXMX-I-200-20-✻✻✻-T1	Incremental	200		800 ~ 2000			
	Y-axis	ISA [ISPA] -MYM-I-100-20-✻✻✻-T1		100		100 ~ 500			

* In the above model names, □ indicates the configuration direction, ✻✻✻ the stroke/applicable options (stroke is specified in centimeters), △ the cable length and ○ the wiring.

Options

Name	Code	Page	Remarks
AQ seal	AQ	➔ P13	
Brake	B	➔ P13	
Creep sensor	C	➔ P13	
Home limit switch	L	➔ P14	
Reverse homing specification	NM	➔ P14	
Guide with ball-retaining mechanism	RT	➔ P14	

Common Specifications

Drive system (Note 4)	Ball screw, rolled C10 [equivalent to rolled C5]
Backlash (Note 5)	0.05mm or less [0.02mm or less]
Guide	Integrated with base
Base	Material: Aluminum with white alumite treatment
Cable length (Note 6)	3L: 3m, 5L: 5m, □L : Length specification
Cable management	CT: Cable track

Configuration direction

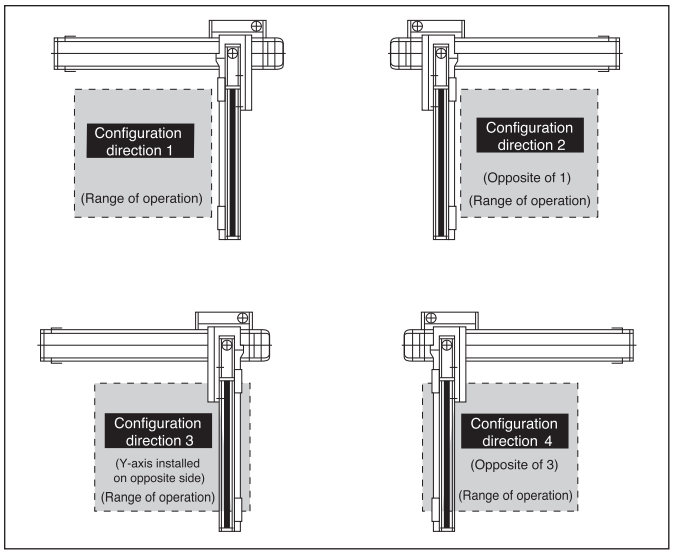

Load Capacity by Acceleration (kg)

Acceleration (G) \ Y-axis stroke (mm)	100	200	300	400	500
0.3	20.0	20.0	20.0	20.0	18.7
0.4					
0.5					
0.6					
0.7					
0.8					
0.9					
1.0					

Maximum Speed by Stroke (mm/sec)

Axis \ Stroke (mm)	100 ~ 500	800 ~ 1300	1400	1500	1600	1700	1800	1900	2000
X-axis	–	1000	950	800	700	600	550	500	450
Y-axis	–	–	–	–	–	–	–	–	–

Applicable Controller Specifications

Applicable controller	Maximum number of controlled axes	Compatible encoder type	Program operation	Positioner operation	Pulse-train control	Supply voltage	Page
X-SEL(-P/Q)	4(6) axes	Absolute/incremental	○	△		AC100/230V	234
S-SEL	2 axes	Absolute/incremental	○	△		AC100/230V	-
S-/E-CON	1 axis	Absolute/incremental		○ / ○	○ / -	AC100/230V	- / 226

Caution

(Note 1) The maximum speed will vary depending on the stroke. (Refer to the table of maximum speed by stroke.)
(Note 2) The load capacity assumes operation at the rated acceleration (0.3 G). The rated acceleration is the maximum specifiable acceleration for both the ICSA2 and ICSPA2.
(Notes 3, 4, 5) The figures in brackets apply to the ICSPA2.
(Note 6) The cable length measures from the X-axis connector box to the controller. The standard lengths are 3 m and 5 m, but other lengths can also be specified in meters up to 20 m (e.g., 10L = 10 m).

* Refer to page 59 for other points to note.

Cable Track Specification (Cable Management Code: CT)

Dimensions

* The standard cable management specification of the XYB-D is the cable track. (Self-standing cable is not available.)

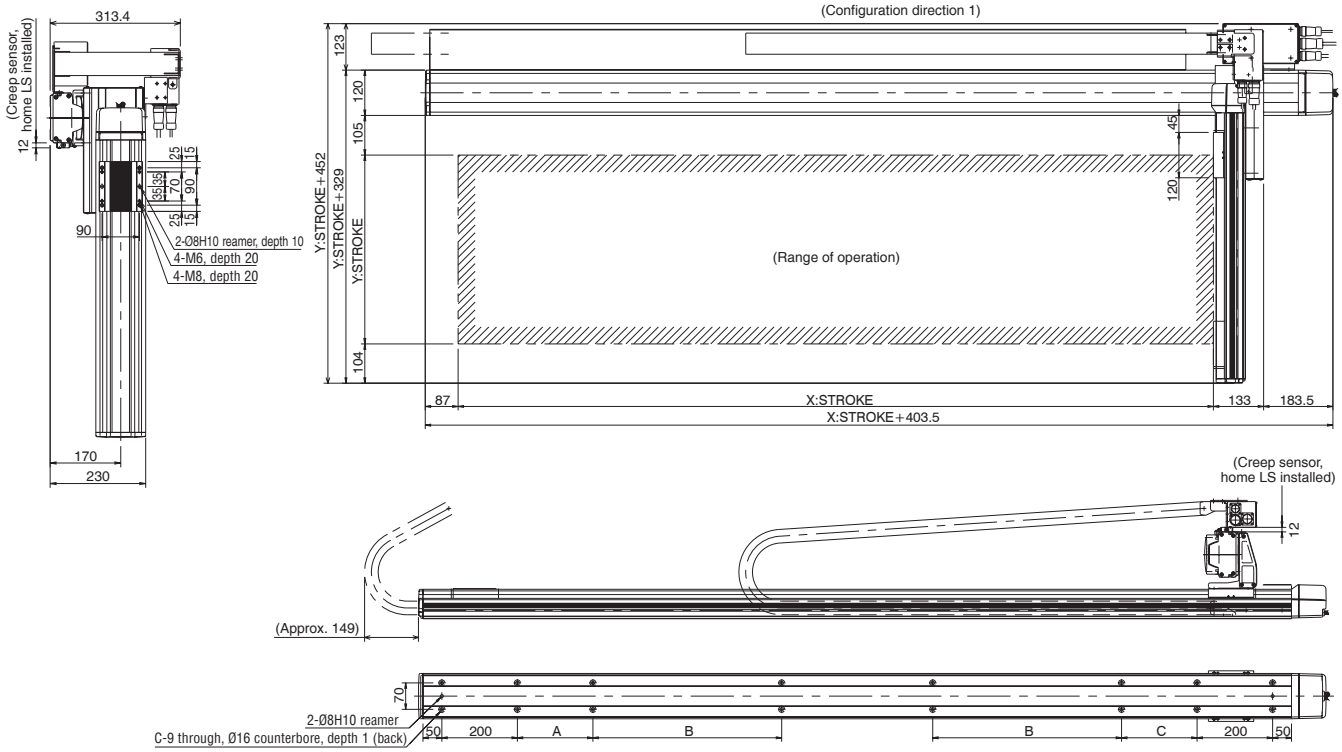

X stroke	800	900	1000	1100	1200	1300	1400	1500	1600	1700	1800	1900	2000
A	0	0	200	250	300	350	400	450	500	550	200	200	200
B	0	0	0	0	0	0	0	0	0	0	400	450	500
C	200	200	200	250	300	350	400	450	500	550	200	200	200
D	10	10	12	12	12	12	12	12	12	12	16	16	16

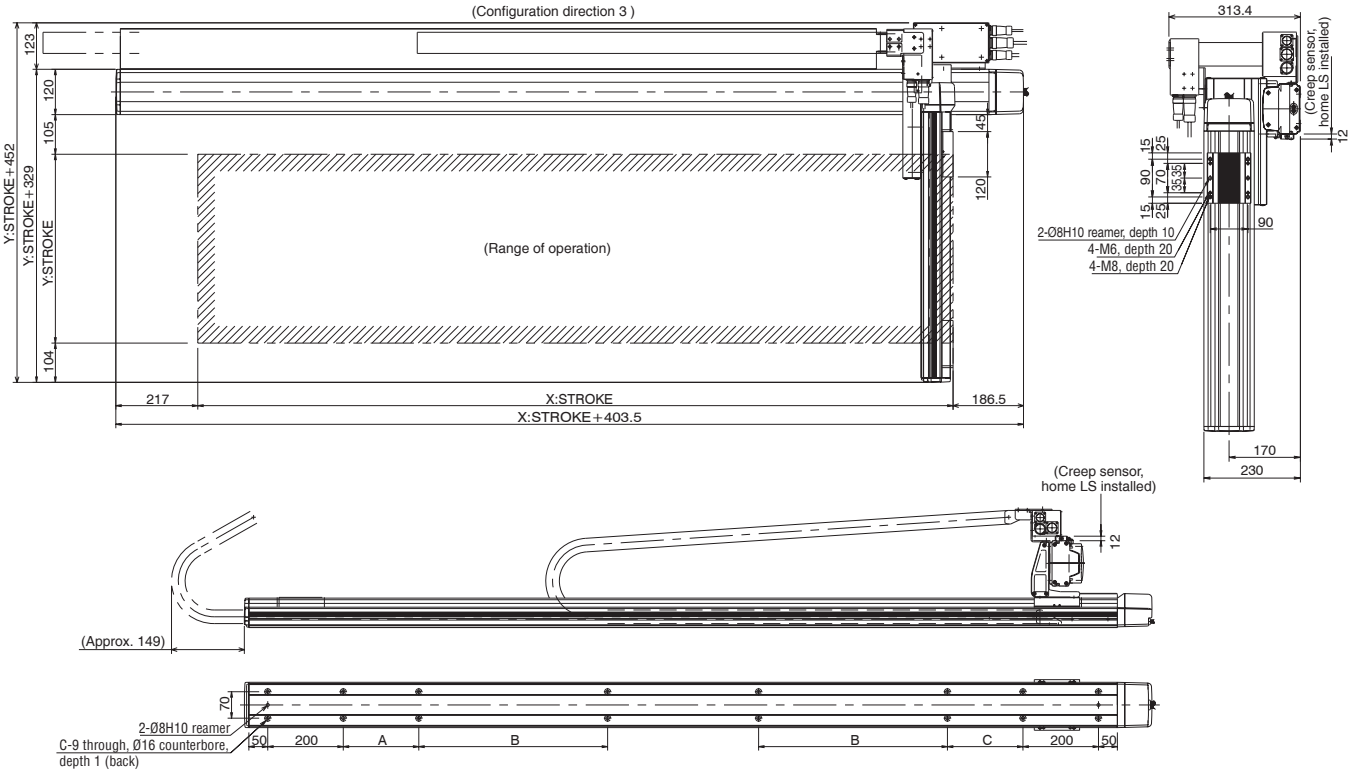

X stroke	800	900	1000	1100	1200	1300	1400	1500	1600	1700	1800	1900	2000
A	0	0	200	250	300	350	400	450	500	550	200	200	200
B	0	0	0	0	0	0	0	0	0	0	400	450	500
C	200	200	200	250	300	350	400	450	500	550	200	200	200
D	10	10	12	12	12	12	12	12	12	12	16	16	16

ICSA2-BE□H
Cartesian Robot: X-Y 2-Axes Configuration, XYB (Y-Axis Base Mount) Type

ICSPA2-BE□H
Cartesian Robot: X-Y 2-Axes Configuration, XYB (Y-Axis Base Mount) Type High-Precision Specification

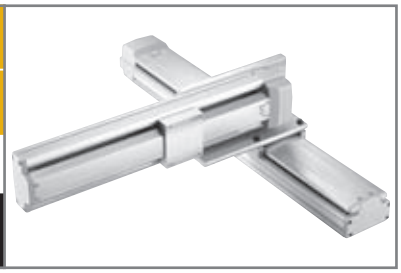

Type	Stroke	Load capacity
XYB type	X-axis: 300~1000mm Y-axis: 200~700mm	40kg ~ 19.3kg

■ Model specification items

Series	Type	Encoder type	X-axis stroke + options	Y-axis stroke + options	Applicable controller	Cable length	Cable management
ICSA2	BE1H	A	100AQLNM	70AQL	T1	5L	SC

* Refer to page 61 for the details of model specification items.

Models/Specifications

Model	Axis configuration		Encoder type	Motor output (W)	Lead (mm)	Stroke (mm) In increments of 100mm	Speed (mm/s) (Note 1)	Load capacity (Note 2)	Positioning repeatability (mm) (Note 3)
ICSA2 [ICSPA2] -BE□H-A-✻✻✻-✻✻✻-T1-△-○	X-axis	ISA [ISPA] -LXM-A-400-20-✻✻✻-T1	Absolute	400	20	300 ~ 1000	1 ~ 1000	40 ~ 19.3	±0.02 [±0.01]
	Y-axis	ISA [ISPA] -MYM-A-200-20-✻✻✻-T1		200		200 ~ 700			
ICSA2 [ICSPA2] -BE□H-I-✻✻✻-✻✻✻-T1-△-○	X-axis	ISA [ISPA] -LXM-I-400-20-✻✻✻-T1	Incremental	400		300 ~ 1000			
	Y-axis	ISA [ISPA] -MYM-I-200-20-✻✻✻-T1		200		200 ~ 700			

* In the above model names, □ indicates the configuration direction, ✻✻✻ the stroke/applicable options (stroke is specified in centimeters), △ the cable length and ○ the wiring.

Options

Name	Code	Page	Remarks
AQ seal	AQ	➔ P13	
Brake	B	➔ P13	
Creep sensor	C	➔ P13	
Home limit switch	L	➔ P14	
Reverse homing specification	NM	➔ P14	
Guide with ball-retaining mechanism	RT	➔ P14	

Common Specifications

Drive system (Note 4)	Ball screw, rolled C10 [equivalent to rolled C5]
Backlash (Note 5)	0.05mm or less [0.02mm or less]
Guide	Integrated with base
Base	Material: Aluminum with white alumite treatment
Cable length (Note 6)	3L: 3m, 5L: 5m, □L : Length specification
Cable management	SC: Self-standing cable CT: Cable track

Load Capacity by Acceleration (kg)

Acceleration (G) \ Y-axis stroke (mm)	200	300	400	500	600	700
0.3	40.0	40.0	33.0	27.3	22.9	19.3
0.4	30.0	30.0	30.0	27.3	22.9	19.3
0.5	24.0	24.0	24.0	24.0	22.9	19.3
0.6	20.0	20.0	20.0	20.0	20.0	19.3
0.7	17.0	17.0	17.0	17.0	17.0	16.0
0.8	15.0	15.0	14.6	13.5	12.5	11.5
0.9	13.5	12.6	11.6	10.5	9.5	8.5
1.0	10.6	9.6	8.6	7.5	6.5	5.5

Maximum Speed by Stroke (mm/sec)

Axis \ Stroke (mm)	200	300 ~ 700	800	900	1000
X-axis	–	1000		830	690
Y-axis	1000		–	–	–

Configuration direction

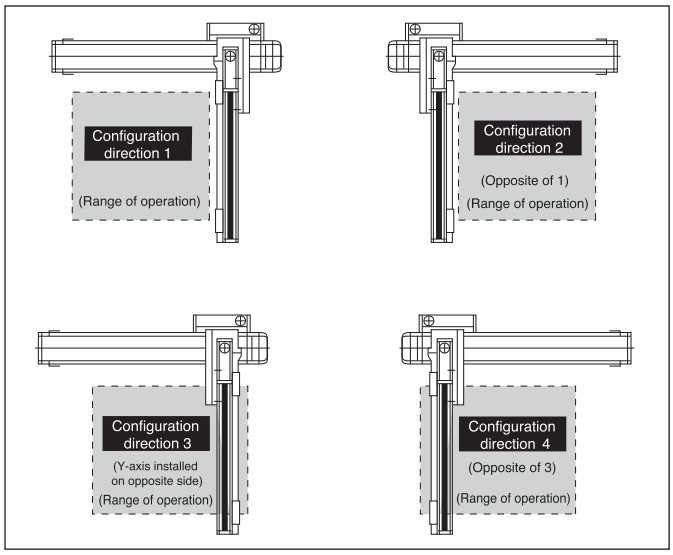

Applicable Controller Specifications

Applicable controller	Maximum number of controlled axes	Compatible encoder type	Program operation	Positioner operation	Pulse-train control	Supply voltage	Page
X-SEL(-P/Q)	4(6) axes	Absolute/incremental	○	△		AC100/230V	234
S-SEL	2 axes	Absolute/incremental	○	△		AC100/230V	-
S-/E-CON	1 axis	Absolute/incremental		○ / ○	○ / -	AC100/230V	- / 226

Caution

(Note 1) The maximum speed will vary depending on the stroke. (Refer to the table of maximum speed by stroke.)
(Note 2) The load capacity assumes operation at the rated acceleration (0.3 G). The actuator can be operated at accelerations beyond the rated acceleration, but the load capacity will decrease (refer to the table of load capacity by acceleration).
(Notes 3, 4, 5) The figures in brackets apply to the ICSPA2.
(Note 6) The cable length measures from the X-axis connector box to the controller. The standard lengths are 3 m and 5 m, but other lengths can also be specified in meters up to 20 m (e.g., 10L = 10 m).

* Refer to page 59 for other points to note.

Self-standing Cable Specification (Cable Management Code: SC)

Dimensions

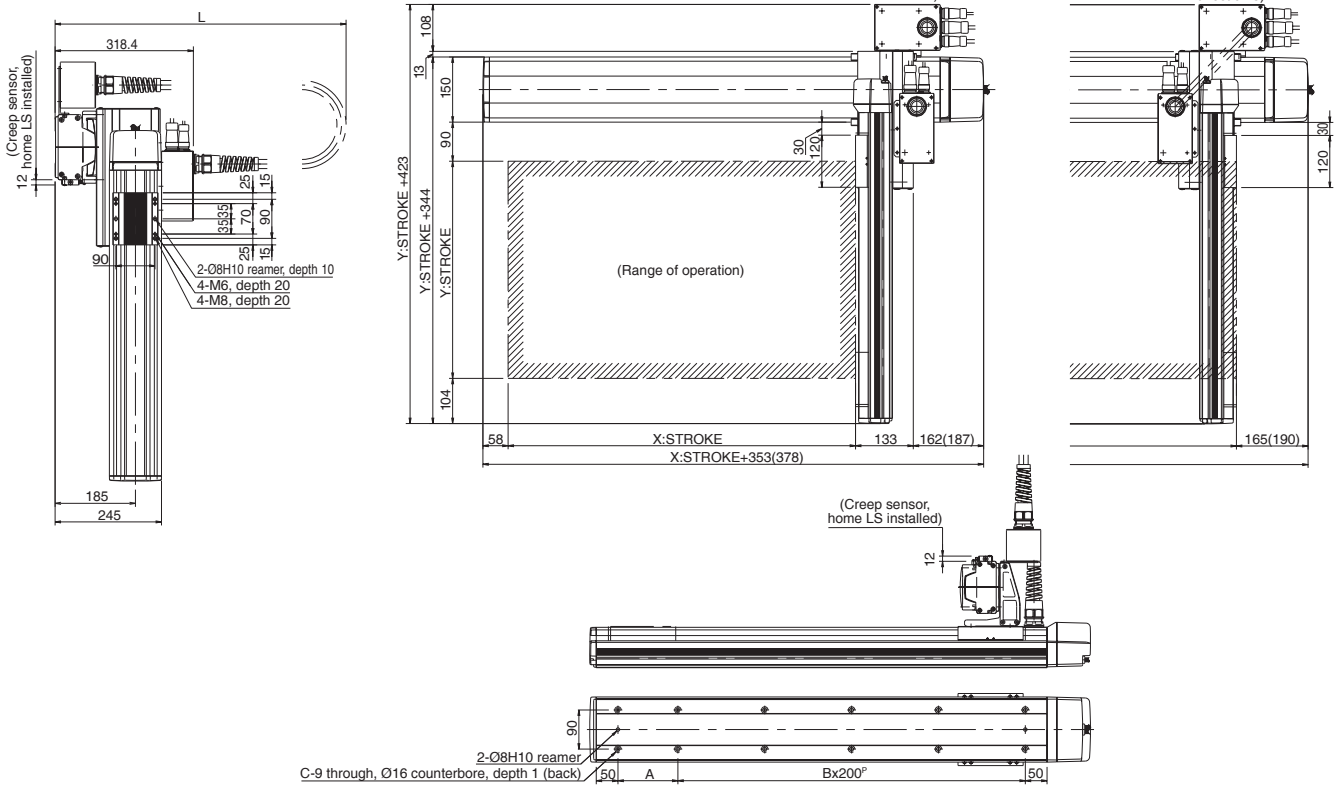

X stroke	300	400	500	600	700	800	900	1000
L	600	650	700	750	800	850	900	950
A	238	138	238	138	238	138	238	138
B	1	2	2	3	3	4	4	5
C	6	8	8	10	10	12	12	14

Cable Track Specification (Cable Management Code: CT)

Dimensions

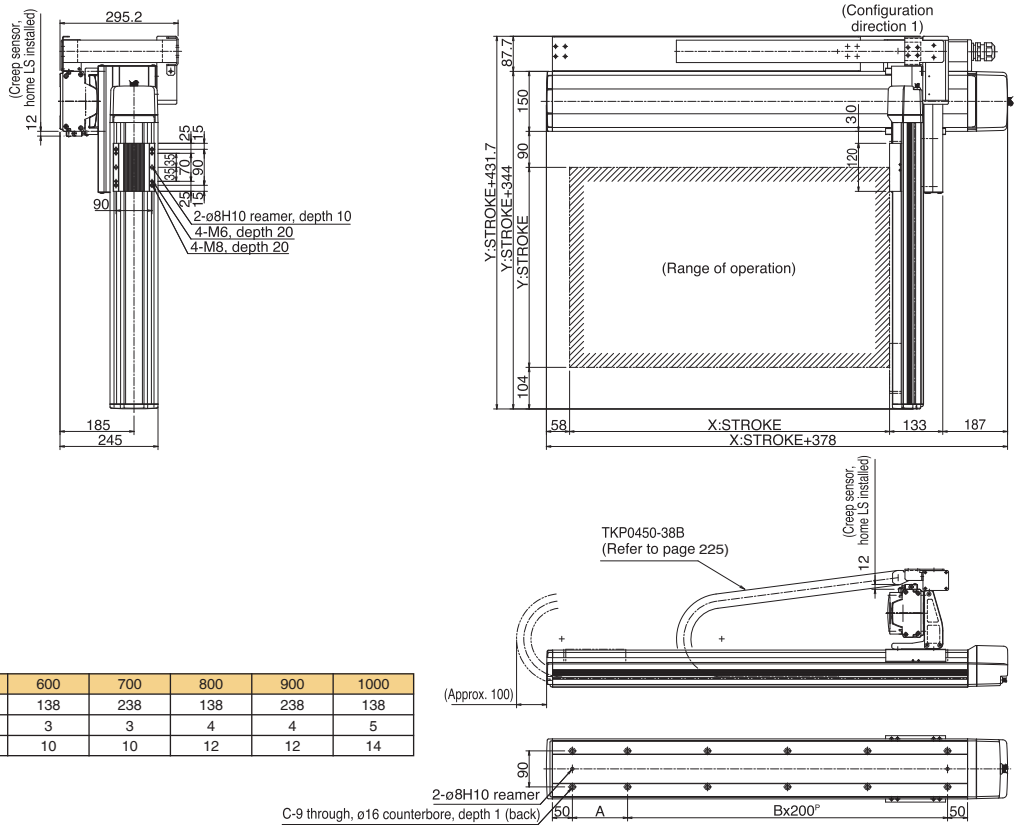

X stroke	300	400	500	600	700	800	900	1000
A	238	138	238	138	238	138	238	138
B	1	2	2	3	3	4	4	5
C	6	8	8	10	10	12	12	14

ICSA2-BE□M Cartesian Robot: X-Y 2-Axes Configuration, XYB (Y-Axis Base Mount) Type

ICSPA2-BE□M Cartesian Robot: X-Y 2-Axes Configuration, XYB (Y-Axis Base Mount) Type High-Precision Specification

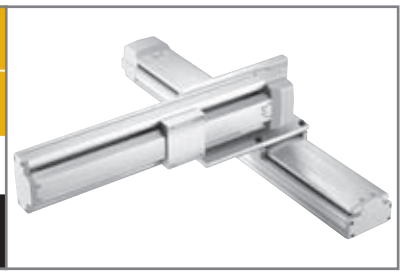

Type: XYB type

Stroke: X-axis: 300~1000mm Y-axis: 200~700mm

Load capacity: 51.2kg ~ 19.3kg

■ Model specification items

Series	Type	Encoder type	X-axis stroke + options	Y-axis stroke + options	Applicable controller	Cable length	Cable management
ICSA2	BE1M	A	100AQLNM	70AQL	T1	5L	SC

* Refer to page 61 for the details of model specification items.

Models/Specifications

Model	Axis configuration		Encoder type	Motor output (W)	Lead (mm)	Stroke (mm) In increments of 100mm	Speed (mm/s) (Note 1)	Load capacity (Note 2)	Positioning repeatability (mm) (Note 3)
ICSA2 [ICSPA2] -BE□M-A-✻✻✻-✻✻✻-T1-△-○	X-axis	ISA [ISPA] -LXM-A-200-10-✻✻✻-T1	Absolute	200	10	300 ~ 1000	1 ~ 500	51.2 ~ 19.3	±0.02 [±0.01]
	Y-axis	ISA [ISPA] -MYM-A-200-10-✻✻✻-T1				200 ~ 700			
ICSA2 [ICSPA2] -BE□M-I-✻✻✻-✻✻✻-T1-△-○	X-axis	ISA [ISPA] -LXM-I-200-10-✻✻✻-T1	Incremental			300 ~ 1000			
	Y-axis	ISA [ISPA] -MYM-I-200-10-✻✻✻-T1				200 ~ 700			

* In the above model names, □ indicates the configuration direction, ✻✻✻ the stroke/applicable options (stroke is specified in centimeters), △ the cable length and ○ the wiring.

Options

Name	Code	Page	Remarks
AQ seal	AQ	➔ P13	
Brake	B	➔ P13	
Creep sensor	C	➔ P13	
Home limit switch	L	➔ P14	
Reverse homing specification	NM	➔ P14	
Guide with ball-retaining mechanism	RT	➔ P14	

Common Specifications

Drive system (Note 4)	Ball screw, rolled C10 [equivalent to rolled C5]
Backlash (Note 5)	0.05mm or less [0.02mm or less]
Guide	Integrated with base
Base	Material: Aluminum with white alumite treatment
Cable length (Note 6)	3L: 3m, 5L: 5m, □L : Length specification
Cable management	SC: Self-standing cable CT: Cable track

Load Capacity by Acceleration (kg)

Acceleration (G) \ Y-axis stroke (mm)	200	300	400	500	600	700
0.3	51.2	40.5	33.0	27.3	22.9	19.3
0.4	46.6	40.5	33.0	27.3	22.9	19.3
0.5	35.1	34.1	33.0	27.3	22.9	19.3
0.6	26.6	25.6	24.6	23.5	22.5	19.3
0.7						
0.8						
0.9						
1.0						

Maximum Speed by Stroke (mm/sec)

Axis \ Stroke (mm)	200	300 ~ 600	700	800	900	1000
X-axis	–	500		470	385	320
Y-axis	500		480	–	–	–

Configuration direction

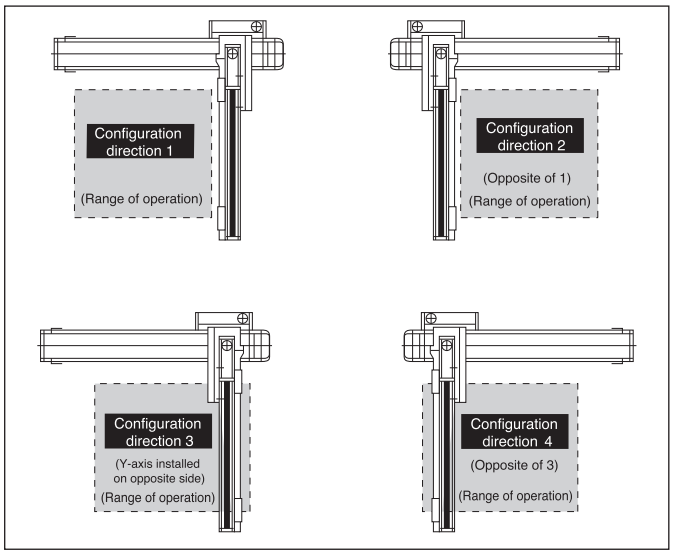

Applicable Controller Specifications

Applicable controller	Maximum number of controlled axes	Compatible encoder type	Program operation	Positioner operation	Pulse-train control	Supply voltage	Page
X-SEL(-P/Q)	4(6) axes	Absolute/incremental	○	△		AC100/230V	234
S-SEL	2 axes	Absolute/incremental	○	△		AC100/230V	-
S-/E-CON	1 axis	Absolute/incremental		○ / ○	○ / -	AC100/230V	- / 226

Caution

(Note 1) The maximum speed will vary depending on the stroke. (Refer to the table of maximum speed by stroke.)
(Note 2) The load capacity assumes operation at the rated acceleration (0.3 G). The actuator can be operated at accelerations beyond the rated acceleration, but the load capacity will decrease (refer to the table of load capacity by acceleration).
(Notes 3, 4, 5) The figures in brackets apply to the ICSPA2.
(Note 6) The cable length measures from the X-axis connector box to the controller. The standard lengths are 3 m and 5 m, but other lengths can also be specified in meters up to 20 m (e.g., 10L = 10 m).

* Refer to page 59 for other points to note.

Self-standing Cable Specification (Cable Management Code: SC)

Dimensions

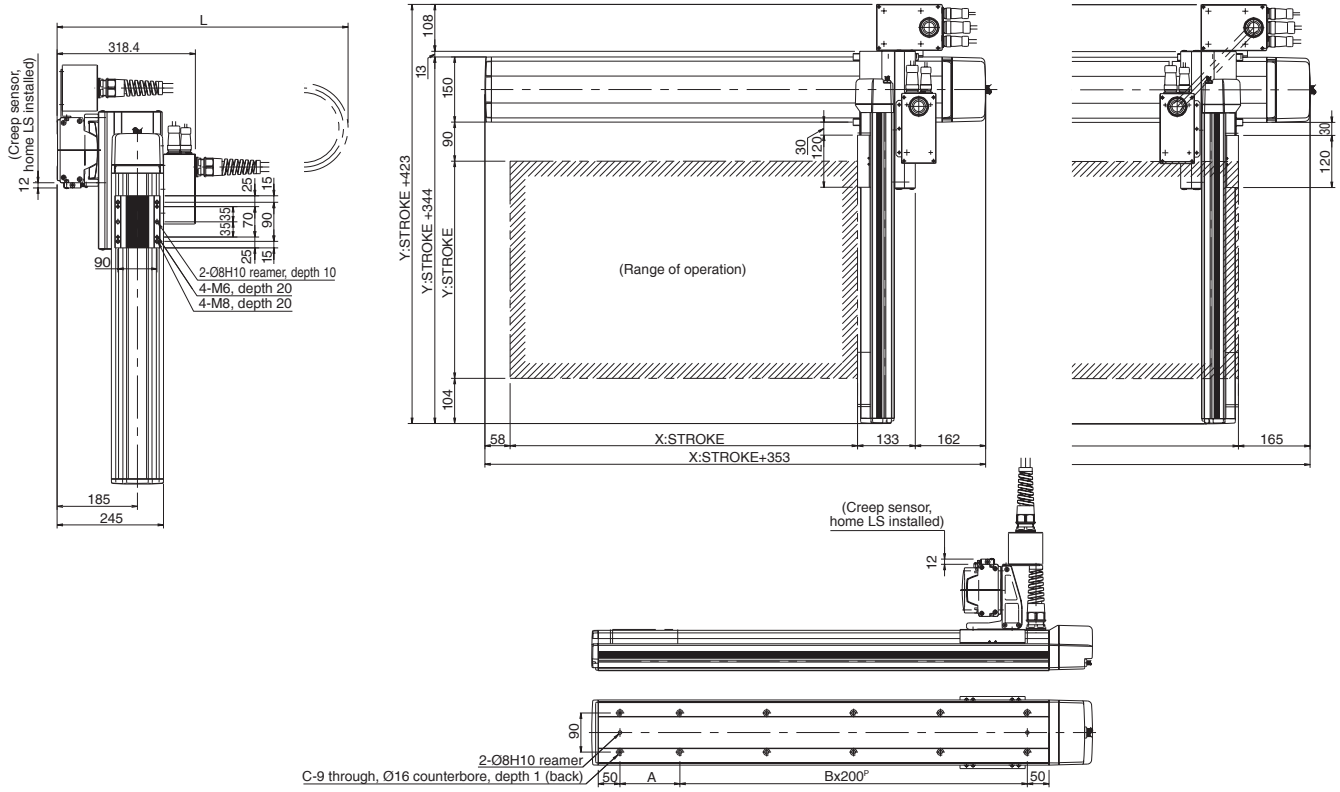

X stroke	300	400	500	600	700	800	900	1000
L	600	650	700	750	800	850	900	950
A	238	138	238	138	238	138	238	138
B	1	2	2	3	3	4	4	5
C	6	8	8	10	10	12	12	14

Cable Track Specification (Cable Management Code: CT)

Dimensions

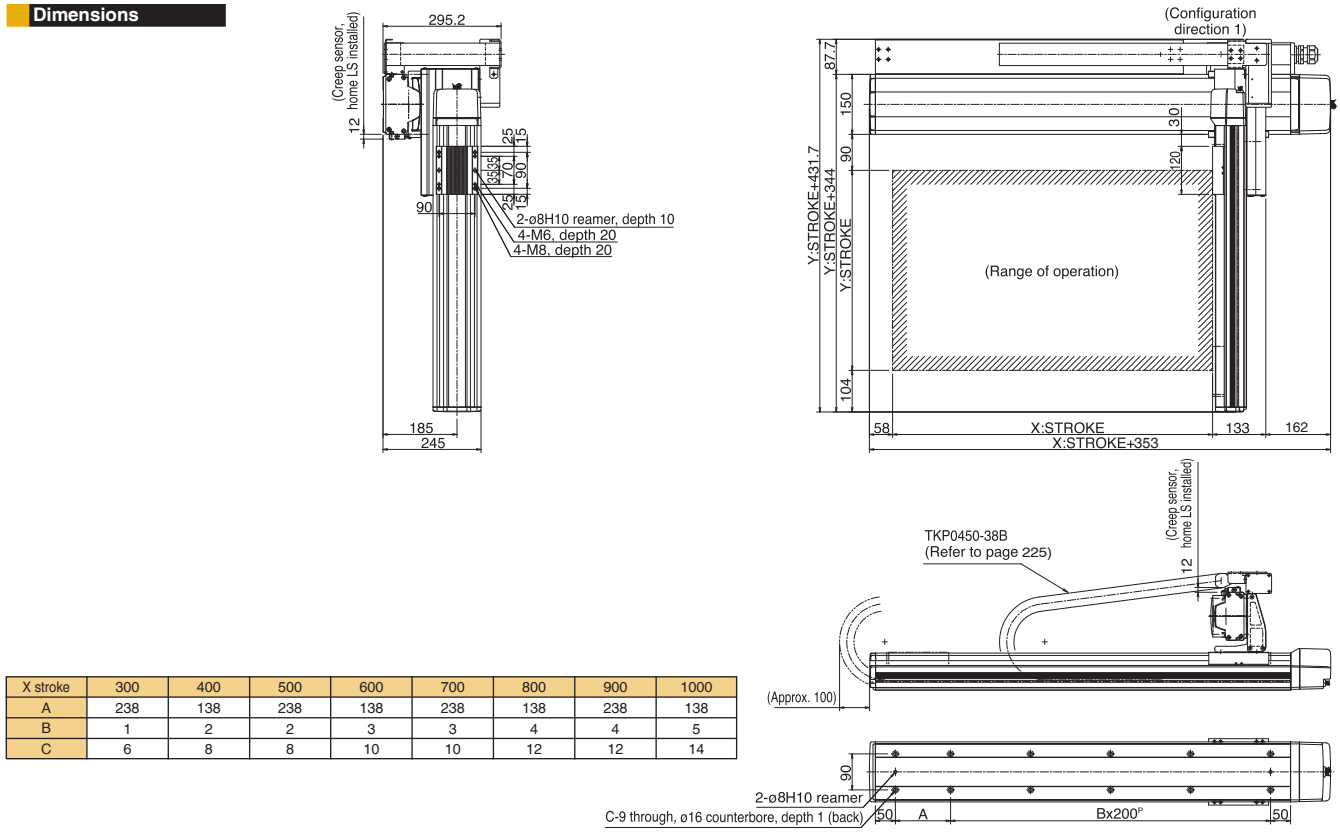

X stroke	300	400	500	600	700	800	900	1000
A	238	138	238	138	238	138	238	138
B	1	2	2	3	3	4	4	5
C	6	8	8	10	10	12	12	14

ICSA2-BF□H
Cartesian Robot: X-Y 2-Axes Configuration, XYB (Y-Axis Base Mount) Type

ICSPA2-BF□H
Cartesian Robot: X-Y 2-Axes Configuration, XYB (Y-Axis Base Mount) Type
High-Precision Specification

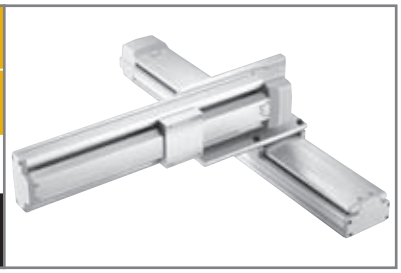

Type: XYB type

Stroke: X-axis: 1000~2500mm Y-axis: 200~700mm

Load capacity: 40kg ~ 19.3kg

■ Model specification items

Series	Type	Encoder type	X-axis stroke + options	Y-axis stroke + options	Applicable controller	Cable length	Cable management
ICSA2 –	BF1H –	A	– 250AQLNM	– 70AQL	– T1	– 5L	– CT

* Refer to page 61 for the details of model specification items.

Models/Specifications

Model	Axis configuration		Encoder type	Motor output (W)	Lead (mm)	Stroke (mm) In increments of 100mm	Speed (mm/s) (Note 1)	Load capacity (Note 2)	Positioning repeatability (mm) (Note 3)
ICSA2 [ICSPA2] -BF□H-A-✻✻✻-✻✻✻-T1-△-CT	X-axis	ISA [ISPA] -LXMX-A-400-20-✻✻✻-T1	Absolute	400	20	1000 ~ 2500	1 ~ 1000	40 ~ 19.3	±0.02 [±0.01]
	Y-axis	ISA [ISPA] -MYM-A-200-20-✻✻✻-T1		200		200 ~ 700			
ICSA2 [ICSPA2] -BF□H-I-✻✻✻-✻✻✻-T1-△-CT	X-axis	ISA [ISPA] -LXMX-I-400-20-✻✻✻-T1	Incremental	400		1000 ~ 2500			
	Y-axis	ISA [ISPA] -MYM-I-200-20-✻✻✻-T1		200		200 ~ 700			

* In the above model names, □ indicates the configuration direction, ✻✻✻ the stroke/applicable options (stroke is specified in centimeters), △ the cable length.

Options

Name	Code	Page	Remarks
AQ seal	AQ	➔ P13	
Brake	B	➔ P13	
Creep sensor	C	➔ P13	
Home limit switch	L	➔ P14	
Reverse homing specification	NM	➔ P14	
Guide with ball-retaining mechanism	RT	➔ P14	

Common Specifications

Drive system (Note 4)	Ball screw, rolled C10 [equivalent to rolled C5]
Backlash (Note 5)	0.05mm or less [0.02mm or less]
Guide	Integrated with base
Base	Material: Aluminum with white alumite treatment
Cable length (Note 6)	3L: 3m, 5L: 5m, □L : Length specification
Cable management	CT: Cable track

Configuration direction

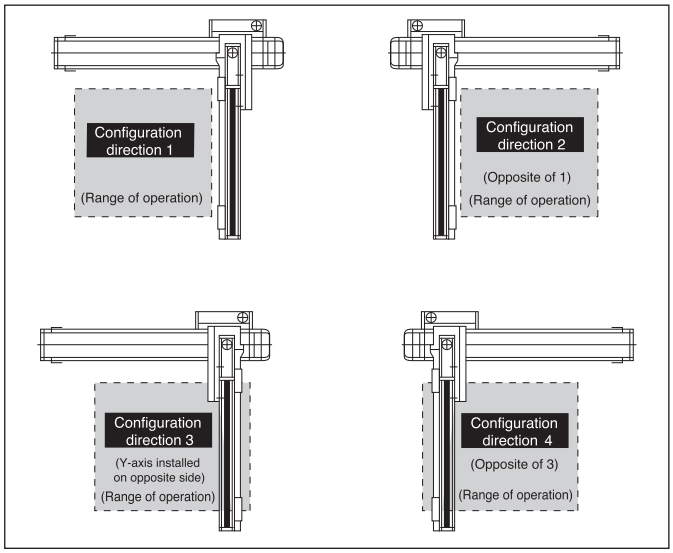

Load Capacity by Acceleration (kg)

Acceleration (G) \ Y-axis stroke (mm)	200	300	400	500	600	700
0.3	40.0	40.0	33.0	27.3	22.9	19.3
0.4						
0.5						
0.6						
0.7						
0.8						
0.9						
1.0						

Maximum Speed by Stroke (mm/sec)

Axis \ Stroke (mm)	200 ~ 700	1000 ~ 1400	1500	1600	1700	1800	1900	2000	2500
X-axis	–	1000	950	830	740	650	590	540	340
Y-axis	1000	–	–	–	–	–	–	–	–

Applicable Controller Specifications

Applicable controller	Maximum number of controlled axes	Compatible encoder type	Program operation	Positioner operation	Pulse-train control	Supply voltage	Page
X-SEL(-P/Q)	4(6) axes	Absolute/incremental	○	△		AC100/230V	234
S-SEL	2 axes	Absolute/incremental	○	△		AC100/230V	-
S-/E-CON	1 axis	Absolute/incremental		○ / ○	○ / -	AC100/230V	- / 226

⚠ Caution

(Note 1) The maximum speed will vary depending on the stroke. (Refer to the table of maximum speed by stroke.)
(Note 2) The load capacity assumes operation at the rated acceleration (0.3 G). The rated acceleration is the maximum specifiable acceleration for both the ICSA2 and ICSPA2.
(Notes 3, 4, 5) The figures in brackets apply to the ICSPA2.
(Note 6) The cable length measures from the X-axis connector box to the controller. The standard lengths are 3 m and 5 m, but other lengths can also be specified in meters up to 20 m (e.g., 10L = 10 m).

* Refer to page 59 for other points to note.

Cable Track Specification (Cable Management Code: CT)

* The standard cable management specification of the XYB-F is the cable track. (Self-standing cable is not available.)

Dimensions

* Note that changing the home direction will require the actuator to be returned to IAI for adjustment.

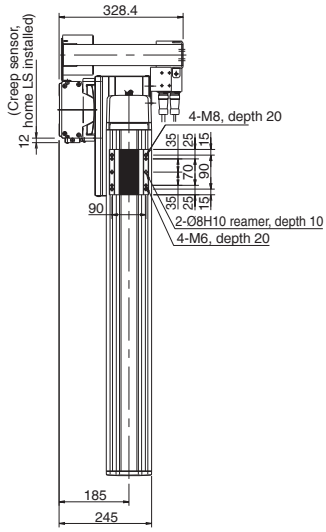

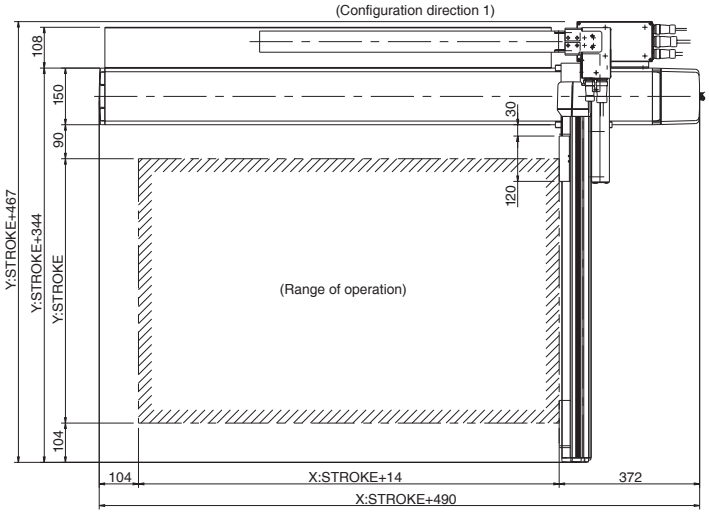

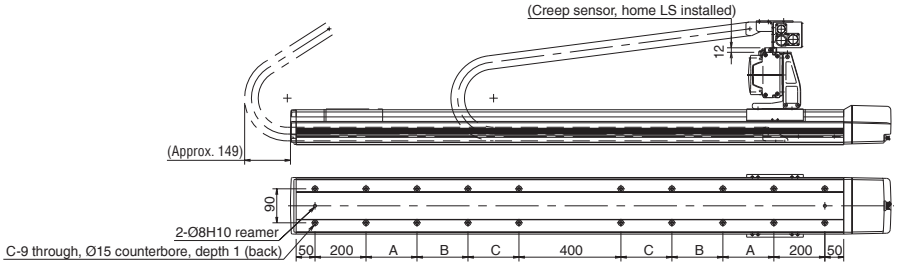

X stroke	1000	1100	1200	1300	1400	1500	1600	1700	1800	1900	2000	2100	2200	2300	2400	2500
A	225	275	325	375	425	475	525	575	200	200	200	200	200	200	200	200
B	0	0	0	0	0	0	0	0	425	475	525	575	200	200	200	200
C	0	0	0	0	0	0	0	0	0	0	0	0	425	475	525	575
D	12	12	12	12	12	12	12	12	16	16	16	16	20	20	20	20

* Note that changing the home direction will require the actuator to be returned to IAI for adjustment.

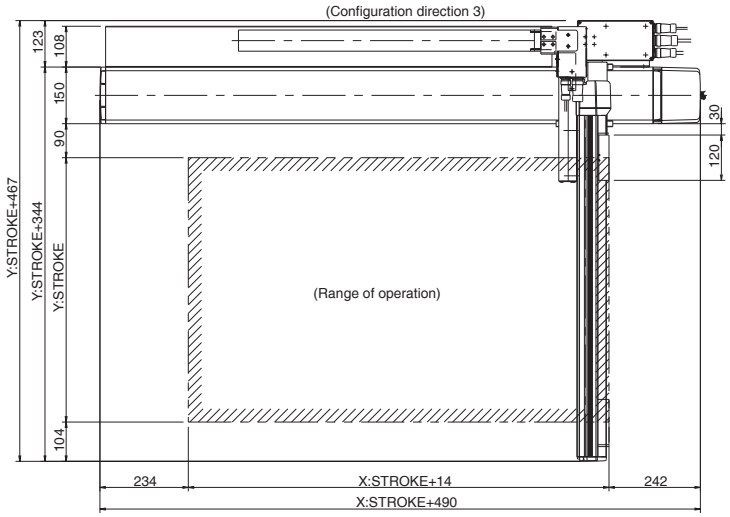

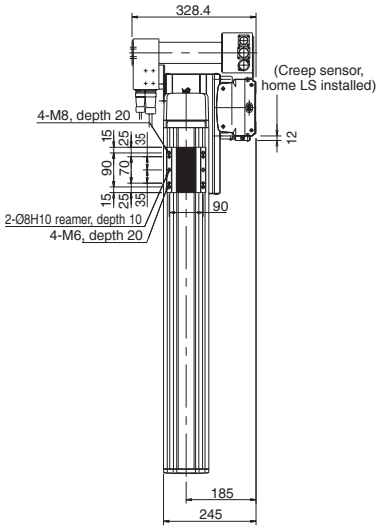

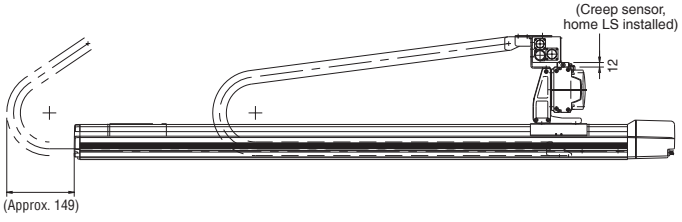

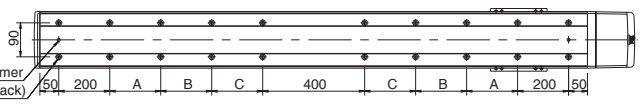

X stroke	1000	1100	1200	1300	1400	1500	1600	1700	1800	1900	2000	2100	2200	2300	2400	2500
A	225	275	325	375	425	475	525	575	200	200	200	200	200	200	200	200
B	0	0	0	0	0	0	0	0	425	475	525	575	200	200	200	200
C	0	0	0	0	0	0	0	0	0	0	0	0	425	475	525	575
D	12	12	12	12	12	12	12	12	16	16	16	16	20	20	20	20

ICSA2-SA□H
Cartesian Robot: X-Y 2-Axes Configuration, XYS (Y-Axis Slider Mount) Type

ICSPA2-SA□H
Cartesian Robot: X-Y 2-Axes Configuration, XYS (Y-Axis Slider Mount) Type High-Precision Specification

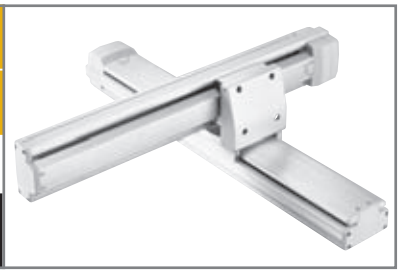

Type: XYS type

Stroke: X-axis: 100~600mm Y-axis: 100~400mm

Load capacity: 6.2kg ~ 4.1kg

■ Model specification items

Series	Type	Encoder type	X-axis stroke + options	Y-axis stroke + options	Applicable controller	Cable length	Cable management
ICSA2	SA1H	A	60AQLNM	40AQL	T1	5L	SC

* Refer to page 61 for the details of model specification items.

Models/Specifications

Model	Axis configuration		Encoder type	Motor output (W)	Lead (mm)	Stroke (mm) In increments of 100mm	Speed (mm/s)	Load capacity (Note 1)	Positioning repeatability (mm) (Note 2)
ICSA2 [ICSPA2] -SA□H-A-＊＊＊-＊＊＊-T1-△-SC	X-axis	ISA [ISPA] -SXM-A-60-16-＊＊＊-T1	Absolute	60	16	100 ~ 600	1 ~ 800	6.2 ~ 4.1	±0.02 [±0.01]
	Y-axis	ISA [ISPA] -SYM-A-60-16-＊＊＊-T1				100 ~ 400			
ICSA2 [ICSPA2] -SA□H-I-＊＊＊-＊＊＊-T1-△-SC	X-axis	ISA [ISPA] -SXM-I-60-16-＊＊＊-T1	Incremental			100 ~ 600			
	Y-axis	ISA [ISPA] -SYM-I-60-16-＊＊＊-T1				100 ~ 400			

* In the above model names, □ indicates the configuration direction, ＊＊＊ the stroke/applicable options (stroke is specified in centimeters), △ the cable length.

Options

Name	Code	Page	Remarks
AQ seal	AQ	➔ P13	
Brake	B	➔ P13	
Creep sensor	C	➔ P13	
Home limit switch	L	➔ P14	
Reverse homing specification	NM	➔ P14	
Guide with ball-retaining mechanism	RT	➔ P14	

Common Specifications

Drive system (Note 4)	Ball screw, rolled C10 [equivalent to rolled C5]
Backlash (Note 5)	0.05mm or less [0.02mm or less]
Guide	Integrated with base
Base	Material: Aluminum with white alumite treatment
Cable length (Note 6)	3L: 3m, 5L: 5m, □L : Length specification
Cable management	SC: Self-standing cable

Load Capacity by Acceleration (kg)

Acceleration (G) \ Y-axis stroke (mm)	100	200	300	400
0.3	6.2	5.5	4.8	4.1
0.4	3.2	2.5	1.8	1.1
0.5	1.2	0.5		
0.6	0.2			
0.7				
0.8				
0.9				
1.0				

Maximum Speed by Stroke (mm/sec)

Axis \ Stroke (mm)	100 ~ 400	500 ~ 600
X-axis	800	
Y-axis	800	–

Configuration direction

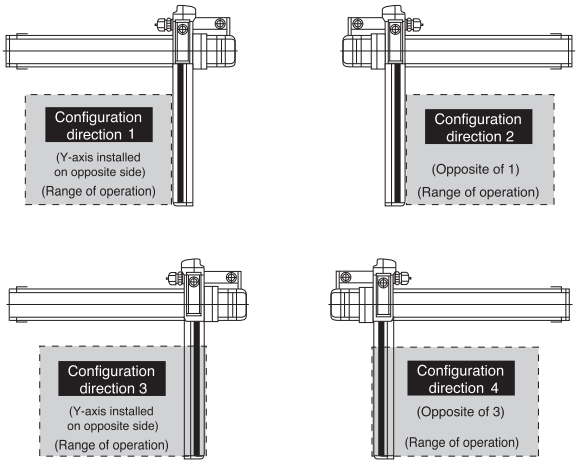

Applicable Controller Specifications

Applicable controller	Maximum number of controlled axes	Compatible encoder type	Program operation	Positioner operation	Pulse-train control	Supply voltage	Page
X-SEL(-P/Q)	4(6) axes	Absolute/incremental	○	△		AC100/230V	234
S-SEL	2 axes	Absolute/incremental	○	△		AC100/230V	-
S-/E-CON	1 axis	Absolute/incremental		○ / ○	○ / -	AC100/230V	- / 226

Caution

(Note 1) The load capacity assumes operation at the rated acceleration (0.3 G). The actuator can be operated at accelerations beyond the rated acceleration, but the load capacity will decrease (refer to the table of load capacity by acceleration).
(Notes 2, 3, 4) The figures in brackets apply to the ICSPA2.
(Note 5) The cable length measures from the X-axis connector box to the controller. The standard lengths are 3 m and 5 m, but other lengths can also be specified in meters up to 20 m (e.g., 10L = 10 m).

* Refer to page 59 for other points to note.

Self-standing Cable Specification (Cable Management Code: SC)

Dimensions

* Note that changing the home direction will require the actuator to be returned to IAI for adjustment.

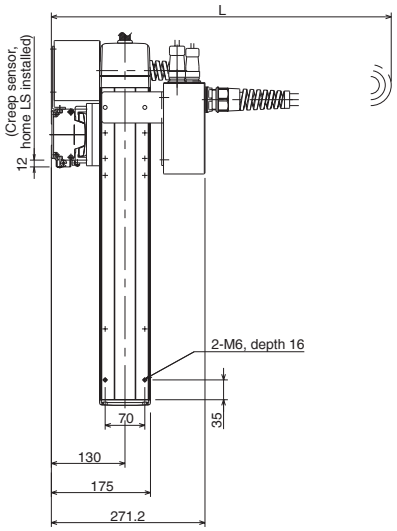

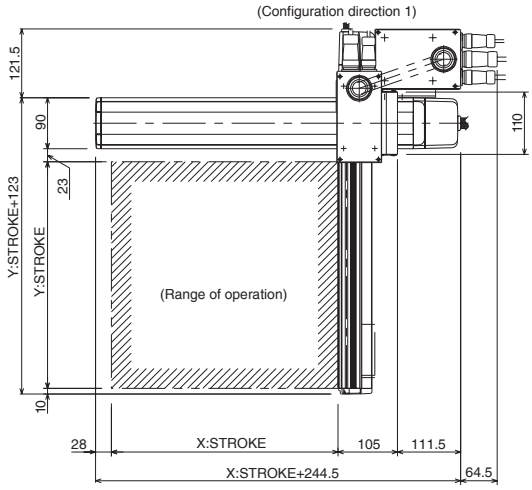

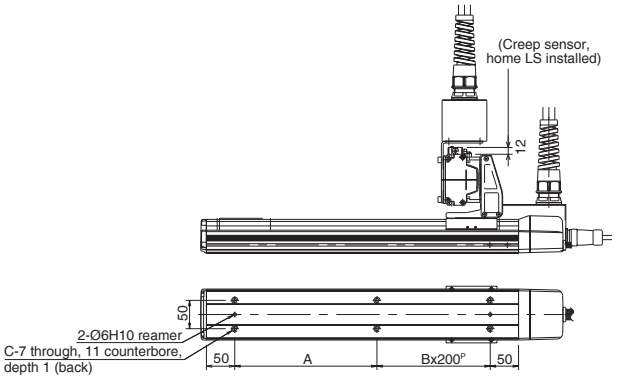

Dimension L						
Yst \ Xst	100	200	300	400	500	600
100	480	530	580	630	680	730
200	530	580	630	680	730	780
300	580	630	680	730	780	830
400	630	680	730	780	830	880

X stroke	100	200	300	400	500	600
A	151	251	151	251	151	251
B	0	0	1	1	2	2
C	4	4	6	6	8	8

---

* Note that changing the home direction will require the actuator to be returned to IAI for adjustment.

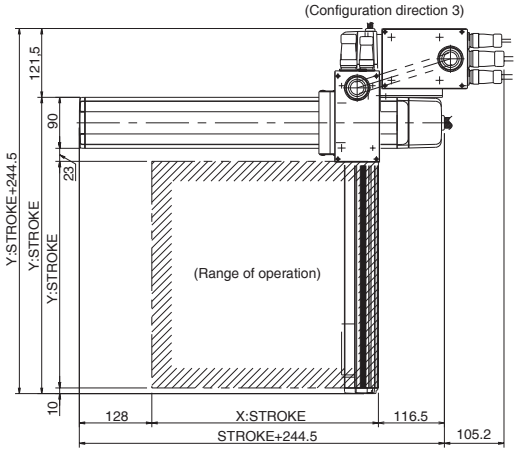

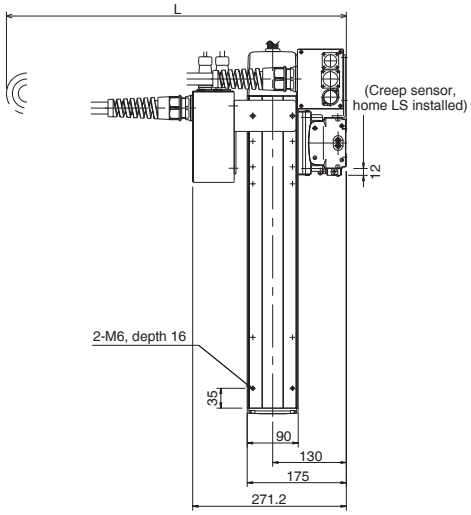

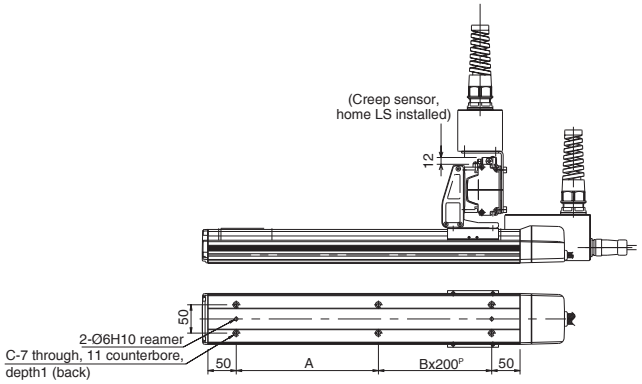

Dimension L						
Yst \ Xst	100	200	300	400	500	600
100	480	530	580	630	680	730
200	530	580	630	680	730	780
300	580	630	680	730	780	830
400	630	680	730	780	830	880

X stroke	100	200	300	400	500	600
A	151	251	151	251	151	251
B	0	0	1	1	2	2
C	4	4	6	6	8	8

ICSA2-SA□M
Cartesian Robot: X-Y 2-Axes Configuration, XYS (Y-Axis Slider Mount) Type

ICSPA2-SA□M
Cartesian Robot: X-Y 2-Axes Configuration, XYS (Y-Axis Slider Mount) Type High-Precision Specification

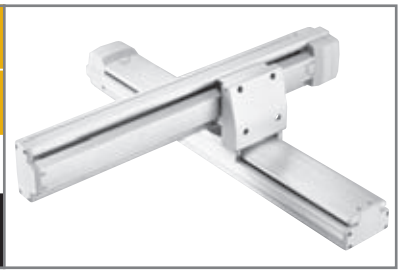

Type: XYS type

Stroke: X-axis: 100~600mm Y-axis: 100~400mm

Load capacity: 19.2kg ~ 6.4kg

■ Model specification items

Series	Type	Encoder type	X-axis stroke + options	Y-axis stroke + options	Applicable controller	Cable length	Cable management
ICSA2	SA1M	A	60AQLNM	40AQL	T1	5L	SC

* Refer to page 61 for the details of model specification items.

Models/Specifications

Model	Axis configuration		Encoder type	Motor output (W)	Lead (mm)	Stroke (mm) In increments of 100mm	Speed (mm/s)	Load capacity (Note 1)	Positioning repeatability (mm) (Note 2)
ICSA2 [ICSPA2] -SA□M-A-＊＊＊-＊＊＊-T1-△-SC	X-axis	ISA [ISPA] -SXM-A-60-8-＊＊＊-T1	Absolute	60	8	100 ~ 600	1 ~ 400	19.2 ~ 6.4	±0.02 [±0.01]
	Y-axis	ISA [ISPA] -SYM-A-60-8-＊＊＊-T1				100 ~ 400			
ICSA2 [ICSPA2] -SA□M-I-＊＊＊-＊＊＊-T1-△-SC	X-axis	ISA [ISPA] -SXM-I-60-8-＊＊＊-T1	Incremental			100 ~ 600			
	Y-axis	ISA [ISPA] -SYM-I-60-8-＊＊＊-T1				100 ~ 400			

* In the above model names, □ indicates the configuration direction, ＊＊＊ the stroke/applicable options (stroke is specified in centimeters), △ the cable length.

Options

Name	Code	Page	Remarks
AQ seal	AQ	➔ P13	
Brake	B	➔ P13	
Creep sensor	C	➔ P13	
Home limit switch	L	➔ P14	
Reverse homing specification	NM	➔ P14	
Guide with ball-retaining mechanism	RT	➔ P14	

Common Specifications

Drive system (Note 4)	Ball screw, rolled C10 [equivalent to rolled C5]
Backlash (Note 5)	0.05mm or less [0.02mm or less]
Guide	Integrated with base
Base	Material: Aluminum with white alumite treatment
Cable length (Note 6)	3L: 3m, 5L: 5m, □L : Length specification
Cable management	SC: Self-standing cable

Load Capacity by Acceleration (kg)

Acceleration (G) \ Y-axis stroke (mm)	100	200	300	400
0.3	19.2	14.3	9.3	6.4
0.4	12.7	12	9.3	6.4
0.5	9.2	8.5	7.8	6.4
0.6	6.2	5.5	4.8	4.1
0.7				
0.8				
0.9				
1.0				

Maximum Speed by Stroke (mm/sec)

Axis \ Stroke (mm)	100 ~ 400	500 ~ 600
X-axis	400	
Y-axis	400	–

Configuration direction

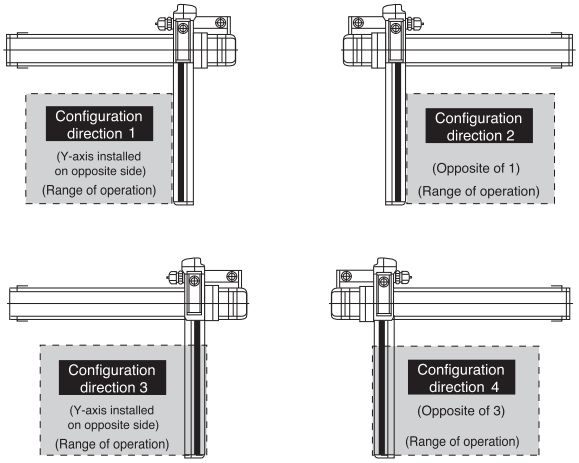

Applicable Controller Specifications

Applicable controller	Maximum number of controlled axes	Compatible encoder type	Program operation	Positioner operation	Pulse-train control	Supply voltage	Page
X-SEL(-P/Q)	4(6) axes	Absolute/incremental	○	△		AC100/230V	234
S-SEL	2 axes	Absolute/incremental	○	△		AC100/230V	-
S-/E-CON	1 axis	Absolute/incremental		○ / ○	○ / -	AC100/230V	- / 226

Caution

(Note 1) The load capacity assumes operation at the rated acceleration (0.3 G). The actuator can be operated at accelerations beyond the rated acceleration, but the load capacity will decrease (refer to the table of load capacity by acceleration).
(Notes 2, 3, 4) The figures in brackets apply to the ICSPA2.
(Note 5) The cable length measures from the X-axis connector box to the controller. The standard lengths are 3 m and 5 m, but other lengths can also be specified in meters up to 20 m (e.g., 10L = 10 m).

* Refer to page 59 for other points to note.

Self-standing Cable Specification (Cable Management Code: SC)

Dimensions

* Note that changing the home direction will require the actuator to be returned to IAI for adjustment.

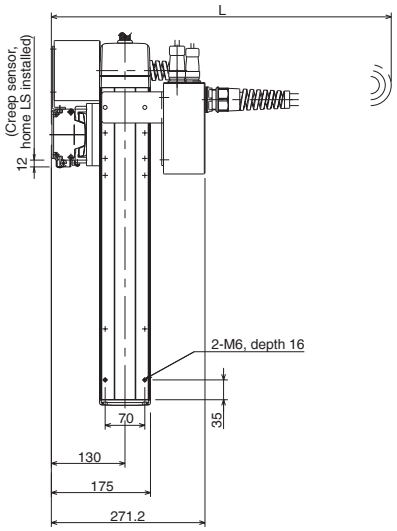

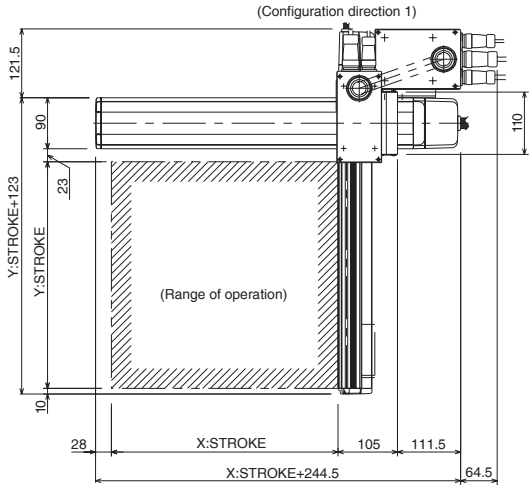

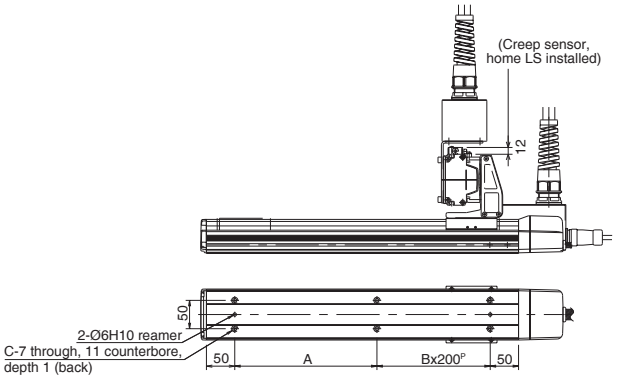

Dimension L						
Yst \ Xst	100	200	300	400	500	600
100	480	530	580	630	680	730
200	530	580	630	680	730	780
300	580	630	680	730	780	830
400	630	680	730	780	830	880

X stroke	100	200	300	400	500	600
A	151	251	151	251	151	251
B	0	0	1	1	2	2
C	4	4	6	6	8	8

---

* Note that changing the home direction will require the actuator to be returned to IAI for adjustment.

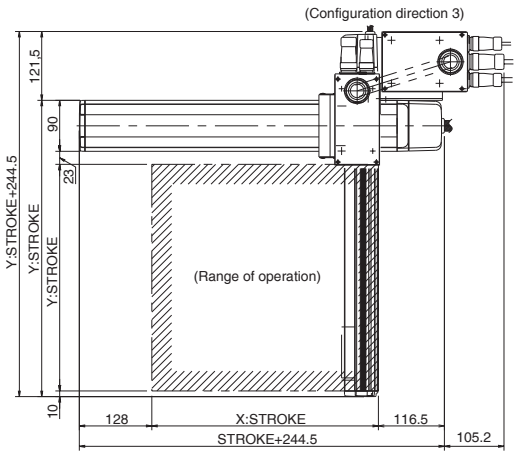

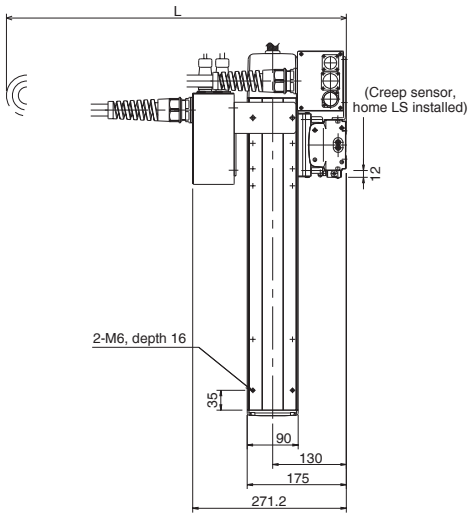

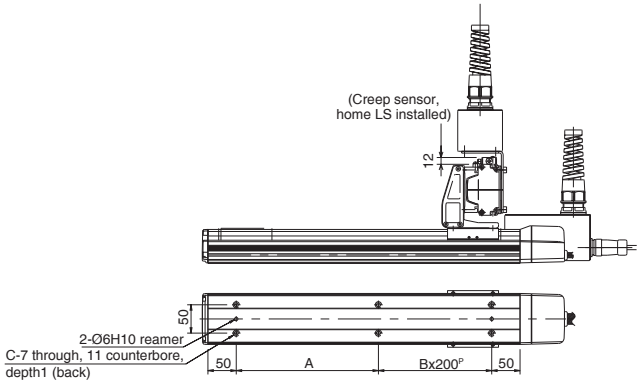

Dimension L						
Yst \ Xst	100	200	300	400	500	600
100	480	530	580	630	680	730
200	530	580	630	680	730	780
300	580	630	680	730	780	830
400	630	680	730	780	830	880

X stroke	100	200	300	400	500	600
A	151	251	151	251	151	251
B	0	0	1	1	2	2
C	4	4	6	6	8	8

ICSA2-S1C□H Cartesian Robot: X-Y 2-Axes Configuration, XYS (Y-Axis Slider Mount) Type

ICSPA2-S1C□H Cartesian Robot: X-Y 2-Axes Configuration, XYS (Y-Axis Slider Mount) Type High-Precision Specification

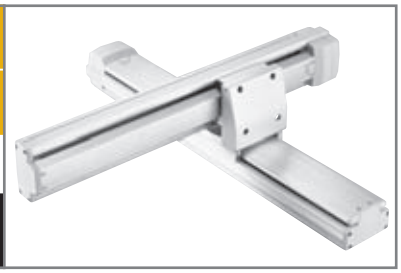

Type: XYS type

Stroke: X-axis: 200~800mm Y-axis: 100~500mm

Load capacity: 9.7kg ~ 5.6kg

■ Model specification items

Series	Type	Encoder type	X-axis stroke + options	Y-axis stroke + options	Applicable controller	Cable length	Cable management
ICSA2	S1C1H	A	80AQLNM	50AQL	T1	5L	SC

* Refer to page 61 for the details of model specification items.

Models/Specifications

Model	Axis configuration		Encoder type	Motor output (W)	Lead (mm)	Stroke (mm) In increments of 100mm	Speed (mm/s) (Note 1)	Load capacity (Note 2)	Positioning repeatability (mm) (Note 3)
ICSA2 [ICSPA2] -S1C□H-A-✻✻✻-✻✻✻-T1-△-SC	X-axis	ISA [ISPA] -MXM-A-100-20-✻✻✻-T1	Absolute	100	20	200 ~ 800	1 ~ 1000	9.7 ~ 5.6	±0.02 [±0.01]
	Y-axis	ISA [ISPA] -MYM-A-100-20-✻✻✻-T1				100 ~ 500			
ICSA2 [ICSPA2] -S1C□H-I-✻✻✻-✻✻✻-T1-△-SC	X-axis	ISA [ISPA] -MXM-I-100-20-✻✻✻-T1	Incremental			200 ~ 800			
	Y-axis	ISA [ISPA] -MYM-I-100-20-✻✻✻-T1				100 ~ 500			

* In the above model names, □ indicates the configuration direction, ✻✻✻ the stroke/applicable options (stroke is specified in centimeters), △ the cable length.

Options

Name	Code	Page	Remarks
AQ seal	AQ	➔ P13	
Brake	B	➔ P13	
Creep sensor	C	➔ P13	
Home limit switch	L	➔ P14	
Reverse homing specification	NM	➔ P14	
Guide with ball-retaining mechanism	RT	➔ P14	

Common Specifications

Drive system (Note 4)	Ball screw, rolled C10 [equivalent to rolled C5]
Backlash (Note 5)	0.05mm or less [0.02mm or less]
Guide	Integrated with base
Base	Material: Aluminum with white alumite treatment
Cable length (Note 6)	3L: 3m, 5L: 5m, □L : Length specification
Cable management	SC: Self-standing cable

Load Capacity by Acceleration (kg)

Acceleration (G) \ Y-axis stroke (mm)	100	200	300	400	500
0.3	9.7	8.7	7.7	6.7	5.6
0.4	4.7	3.7	2.7	1.7	0.6
0.5	1.7	0.7			
0.6					
0.7					
0.8					
0.9					
1.0					

Maximum Speed by Stroke (mm/sec)

Axis \ Stroke (mm)	100	200 ~ 500	600 ~ 700	800
X-axis	–	1000		795
Y-axis	1000		–	–

Configuration direction

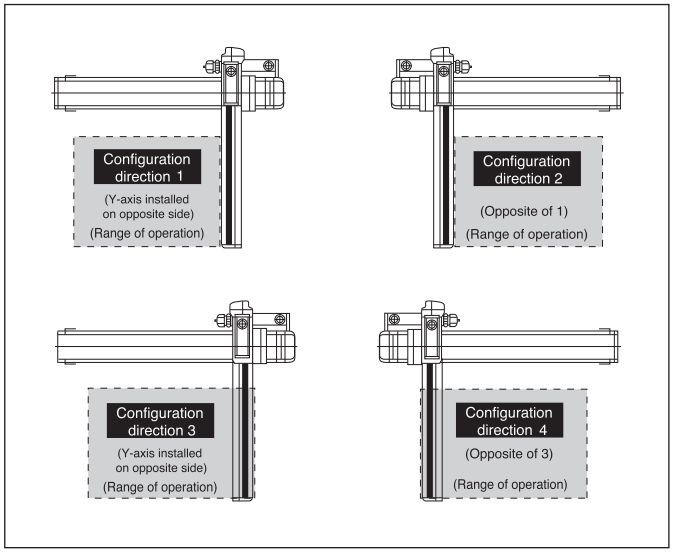

Applicable Controller Specifications

Applicable controller	Maximum number of controlled axes	Compatible encoder type	Program operation	Positioner operation	Pulse-train control	Supply voltage	Page
X-SEL(-P/Q)	4(6) axes	Absolute/incremental	○	△		AC100/230V	234
S-SEL	2 axes	Absolute/incremental	○	△		AC100/230V	-
S-/E-CON	1 axis	Absolute/incremental		○ / ○	○ / -	AC100/230V	- / 226

⚠ Caution

(Note 1) The maximum speed will vary depending on the stroke. (Refer to the table of maximum speed by stroke.)
(Note 2) The load capacity assumes operation at the rated acceleration (0.3 G). The actuator can be operated at accelerations beyond the rated acceleration, but the load capacity will decrease (refer to the table of load capacity by acceleration).
(Notes 3, 4, 5) The figures in brackets apply to the ICSPA2.
(Note 6) The cable length measures from the X-axis connector box to the controller. The standard lengths are 3 m and 5 m, but other lengths can also be specified in meters up to 20 m (e.g., 10L = 10 m).

* Refer to page 59 for other points to note.

Self-standing Cable Specification (Cable Management Code: SC)

Dimensions

* Note that changing the home direction will require the actuator to be returned to IAI for adjustment.

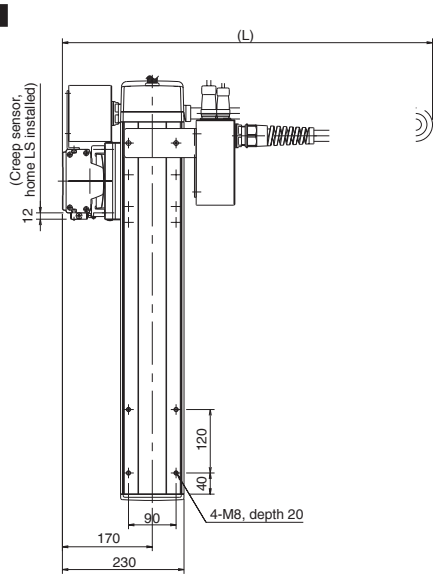

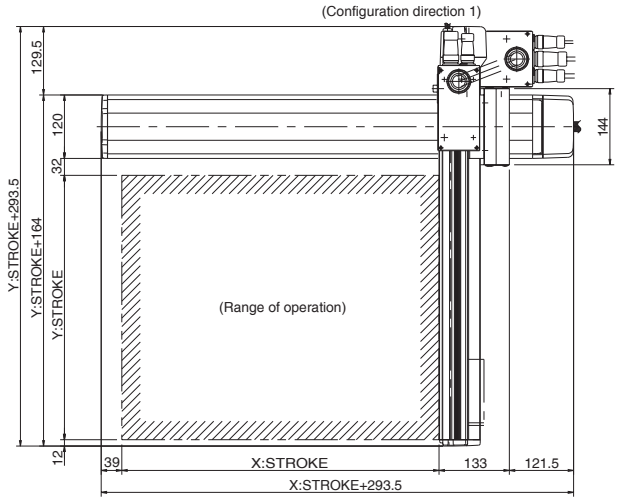

Dimension L							
Yst \ Xst	200	300	400	500	600	700	800
100	550	600	650	700	750	800	850
200	600	650	700	750	800	850	900
300	650	700	750	800	850	900	950
400	700	750	800	850	900	950	1000
500	750	800	850	900	950	1000	1050

X stroke	200	300	400	500	600	700	800
A	104	204	104	204	104	204	104
B	1	1	2	2	3	3	4
C	6	6	8	8	10	10	12

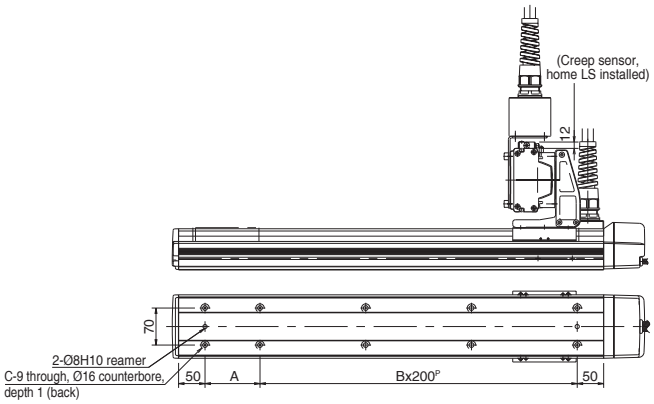

* Note that changing the home direction will require the actuator to be returned to IAI for adjustment.

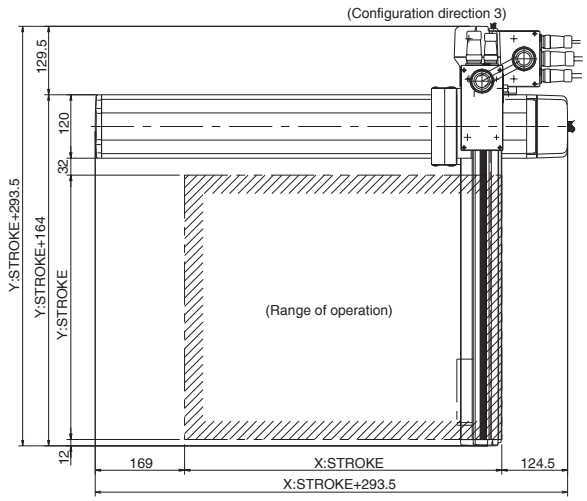

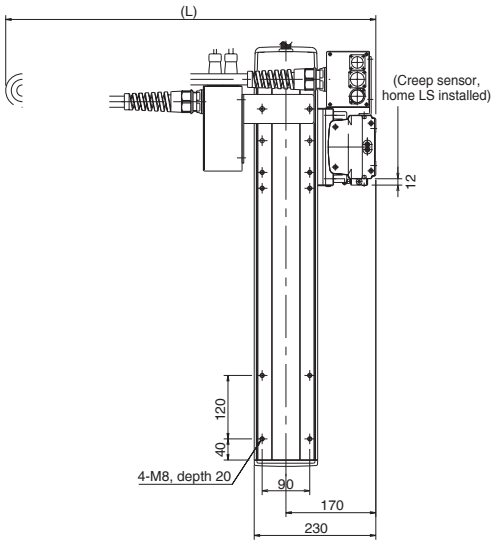

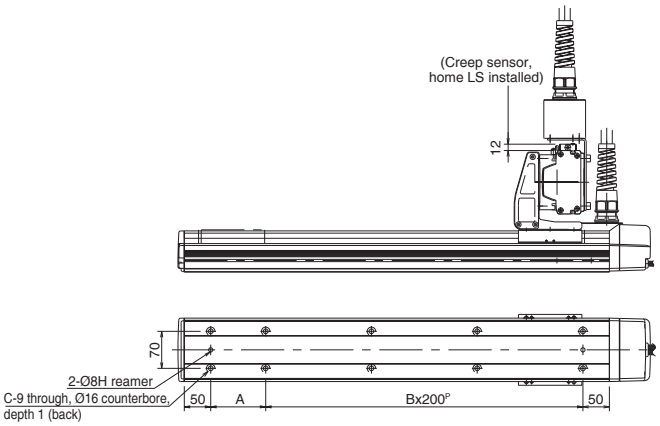

Dimension L							
Yst \ Xst	200	300	400	500	600	700	800
100	550	600	650	700	750	800	850
200	600	650	700	750	800	850	900
300	650	700	750	800	850	900	950
400	700	750	800	850	900	950	1000
500	750	800	850	900	950	1000	1050

X stroke	200	300	400	500	600	700	800
A	104	204	104	204	104	204	104
B	1	1	2	2	3	3	4
C	6	6	8	8	10	10	12

ICSA2-S1C□M Cartesian Robot: X-Y 2-Axes Configuration, XYS (Y-Axis Slider Mount) Type

ICSPA2-S1C□M Cartesian Robot: X-Y 2-Axes Configuration, XYS (Y-Axis Slider Mount) Type High-Precision Specification

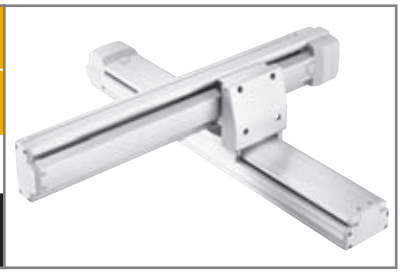

Type: XYS type | Stroke: X-axis: 200~800mm Y-axis: 100~500mm | Load capacity: 29.7kg ~ 9.7kg

■ Model specification items

Series	Type	Encoder type	X-axis stroke + options	Y-axis stroke + options	Applicable controller	Cable length	Cable management
ICSA2	S1C1M	A	80AQLNM	50AQL	T1	5L	SC

* Refer to page 61 for the details of model specification items.

Models/Specifications

Model	Axis configuration		Encoder type	Motor output (W)	Lead (mm)	Stroke (mm) In increments of 100mm	Speed (mm/s) (Note 1)	Load capacity (Note 2)	Positioning repeatability (mm) (Note 3)
ICSA2 [ICSPA2] -S1C□M-A-✻✻✻-✻✻✻-T1-△-SC	X-axis	ISA [ISPA] -MXM-A-100-10-✻✻✻-T1	Absolute	100	10	200 ~ 800	1 ~ 500	29.7 ~ 9.7	±0.02 [±0.01]
	Y-axis	ISA [ISPA] -MYM-A-100-10-✻✻✻-T1				100 ~ 500			
ICSA2 [ICSPA2] -S1C□M-I-✻✻✻-✻✻✻-T1-△-SC	X-axis	ISA [ISPA] -MXM-I-100-10-✻✻✻-T1	Incremental			200 ~ 800			
	Y-axis	ISA [ISPA] -MYM-I-100-10-✻✻✻-T1				100 ~ 500			

* In the above model names, □ indicates the configuration direction, ✻✻✻ the stroke/applicable options (stroke is specified in centimeters), △ the cable length.

Options

Name	Code	Page	Remarks
AQ seal	AQ	➔ P13	
Brake	B	➔ P13	
Creep sensor	C	➔ P13	
Home limit switch	L	➔ P14	
Reverse homing specification	NM	➔ P14	
Guide with ball-retaining mechanism	RT	➔ P14	

Common Specifications

Drive system (Note 4)	Ball screw, rolled C10 [equivalent to rolled C5]
Backlash (Note 5)	0.05mm or less [0.02mm or less]
Guide	Integrated with base
Base	Material: Aluminum with white alumite treatment
Cable length (Note 6)	3L: 3m, 5L: 5m, □L : Length specification
Cable management	SC: Self-standing cable

Load Capacity by Acceleration (kg)

Acceleration (G) \ Y-axis stroke (mm)	100	200	300	400	500
0.3	29.7	28.7	19.3	13.6	9.7
0.4	19.7	18.7	17.7	13.6	9.7
0.5	13.7	12.7	11.7	10.7	9.7
0.6	9.7	8.7	7.7	6.7	5.6
0.7					
0.8					
0.9					
1.0					

Maximum Speed by Stroke (mm/sec)

Axis \ Stroke (mm)	100	200 ~ 500	600	700	800
X-axis	–	500		480	380
Y-axis	500		–	–	–

Configuration direction

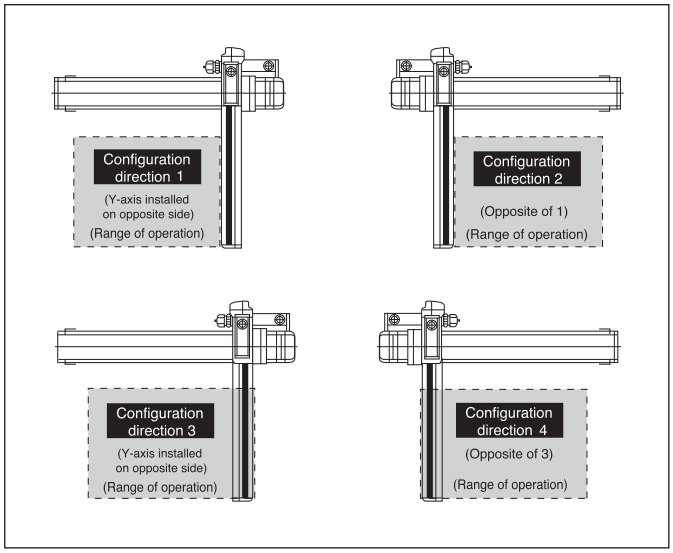

Applicable Controller Specifications

Applicable controller	Maximum number of controlled axes	Compatible encoder type	Program operation	Positioner operation	Pulse-train control	Supply voltage	Page
X-SEL(-P/Q)	4(6) axes	Absolute/incremental	○	△		AC100/230V	234
S-SEL	2 axes	Absolute/incremental	○	△		AC100/230V	-
S-/E-CON	1 axis	Absolute/incremental		○ / ○	○ / -	AC100/230V	- / 226

Caution

(Note 1) The maximum speed will vary depending on the stroke. (Refer to the table of maximum speed by stroke.)
(Note 2) The load capacity assumes operation at the rated acceleration (0.3 G). The actuator can be operated at accelerations beyond the rated acceleration, but the load capacity will decrease (refer to the table of load capacity by acceleration).
(Notes 3, 4, 5) The figures in brackets apply to the ICSPA2.
(Note 6) The cable length measures from the X-axis connector box to the controller. The standard lengths are 3 m and 5 m, but other lengths can also be specified in meters up to 20 m (e.g., 10L = 10 m).

* Refer to page 59 for other points to note.

Self-standing Cable Specification (Cable Management Code: SC)

Dimensions

* Note that changing the home direction will require the actuator to be returned to IAI for adjustment.

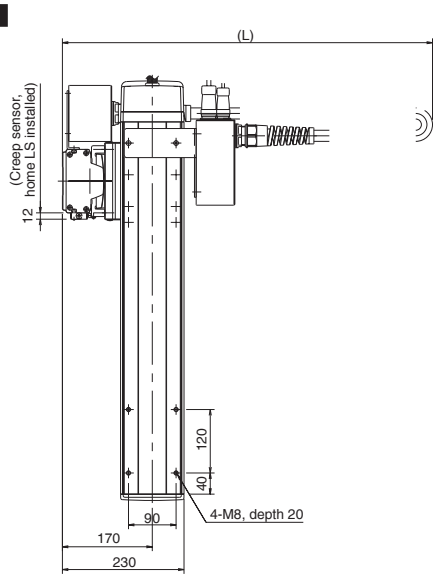

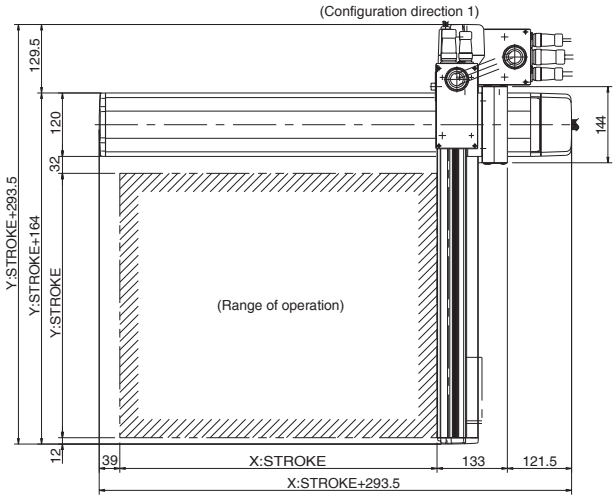

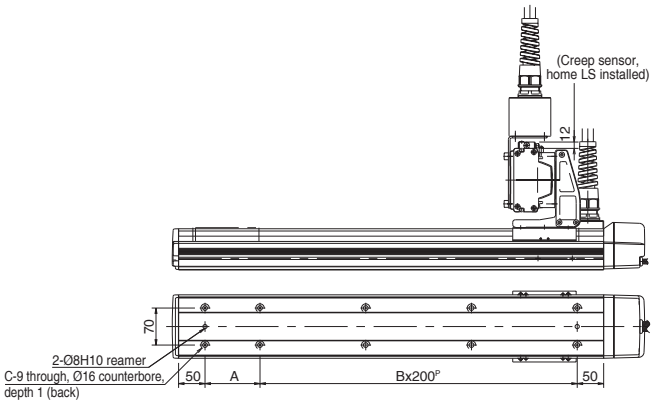

Dimension L							
Yst \ Xst	200	300	400	500	600	700	800
100	550	600	650	700	750	800	850
200	600	650	700	750	800	850	900
300	650	700	750	800	850	900	950
400	700	750	800	850	900	950	1000
500	750	800	850	900	950	1000	1050

X stroke	200	300	400	500	600	700	800
A	104	204	104	204	104	204	104
B	1	1	2	2	3	3	4
C	6	6	8	8	10	10	12

* Note that changing the home direction will require the actuator to be returned to IAI for adjustment.

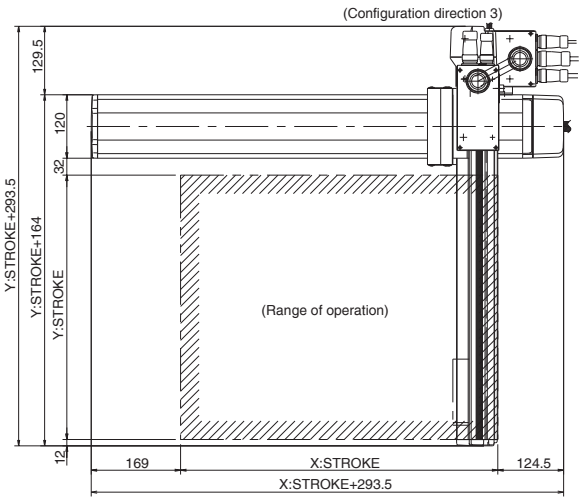

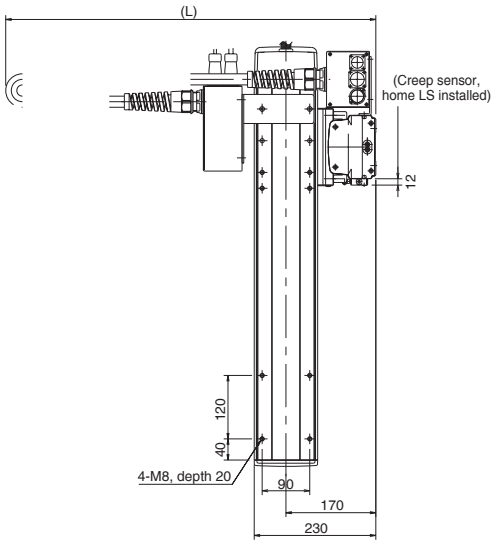

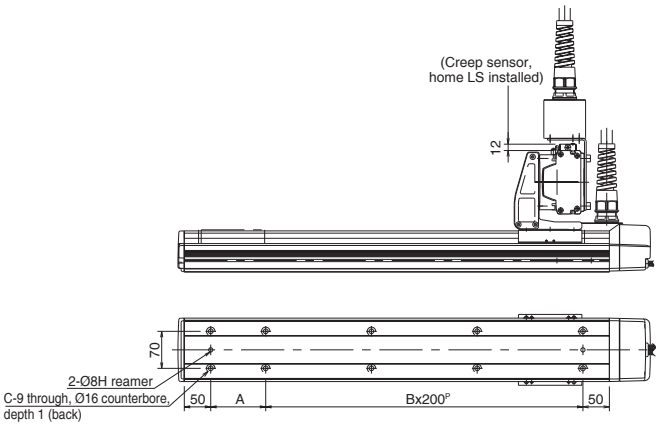

Dimension L							
Yst \ Xst	200	300	400	500	600	700	800
100	550	600	650	700	750	800	850
200	600	650	700	750	800	850	900
300	650	700	750	800	850	900	950
400	700	750	800	850	900	950	1000
500	750	800	850	900	950	1000	1050

X stroke	200	300	400	500	600	700	800
A	104	204	104	204	104	204	104
B	1	1	2	2	3	3	4
C	6	6	8	8	10	10	12

ICSA2-S2C□H
Cartesian Robot: X-Y 2-Axes Configuration, XYS (Y-Axis Slider Mount) Type

ICSPA2-S2C□H
Cartesian Robot: X-Y 2-Axes Configuration, XYS (Y-Axis Slider Mount) Type High-Precision Specification

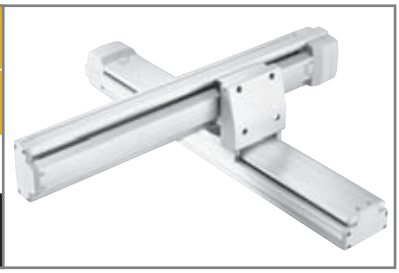

Type: XYS type | Stroke: X-axis: 200~800mm Y-axis: 100~500mm | Load capacity: 29.2kg ~ 9.7kg

■ Model specification items

Series	Type	Encoder type	X-axis stroke + options	Y-axis stroke + options	Applicable controller	Cable length	Cable management
ICSA2	S2C1H	A	80AQLNM	50AQL	T1	5L	SC

* Refer to page 61 for the details of model specification items.

Models/Specifications

Model	Axis configuration		Encoder type	Motor output (W)	Lead (mm)	Stroke (mm) In increments of 100mm	Speed (mm/s) (Note 1)	Load capacity (Note 2)	Positioning repeatability (mm) (Note 3)
ICSA2 [ICSPA2] -S2C□H-A-＊＊＊-＊＊＊-T1-△-SC	X-axis	ISA [ISPA] -MXM-A-200-20-＊＊＊-T1	Absolute	200	20	200 ~ 800	1 ~ 1000	29.2 ~ 9.7	±0.02 [±0.01]
	Y-axis	ISA [ISPA] -MYM-A-200-20-＊＊＊-T1				100 ~ 500			
ICSA2 [ICSPA2] -S2C□H-I-＊＊＊-＊＊＊-T1-△-SC	X-axis	ISA [ISPA] -MXM-I-200-20-＊＊＊-T1	Incremental			200 ~ 800			
	Y-axis	ISA [ISPA] -MYM-I-200-20-＊＊＊-T1				100 ~ 500			

* In the above model names, □ indicates the configuration direction, ＊＊＊ the stroke/applicable options (stroke is specified in centimeters), △ the cable length.

Options

Name	Code	Page	Remarks
AQ seal	AQ	➔ P13	
Brake	B	➔ P13	
Creep sensor	C	➔ P13	
Home limit switch	L	➔ P14	
Reverse homing specification	NM	➔ P14	
Guide with ball-retaining mechanism	RT	➔ P14	

Common Specifications

Drive system (Note 4)	Ball screw, rolled C10 [equivalent to rolled C5]
Backlash (Note 5)	0.05mm or less [0.02mm or less]
Guide	Integrated with base
Base	Material: Aluminum with white alumite treatment
Cable length (Note 6)	3L: 3m, 5L: 5m, □L : Length specification
Cable management	SC: Self-standing cable

Load Capacity by Acceleration (kg)

Acceleration (G) \ Y-axis stroke (mm)	100	200	300	400	500
0.3	29.2	28.2	19.3	13.6	9.7
0.4	19.2	18.2	17.2	13.6	9.7
0.5	13.2	12.2	11.2	10.2	9.1
0.6	9.2	8.2	7.2	6.2	5.1
0.7	6.2	5.2	4.2	3.2	2.1
0.8	4.2	3.2	2.2	1.2	0.1
0.9	2.7	1.7	0.7		
1.0	1.2	0.2			

Maximum Speed by Stroke (mm/sec)

Axis \ Stroke (mm)	100	200 ~ 500	600 ~ 700	800
X-axis	–	1000		795
Y-axis	1000		–	–

Configuration direction

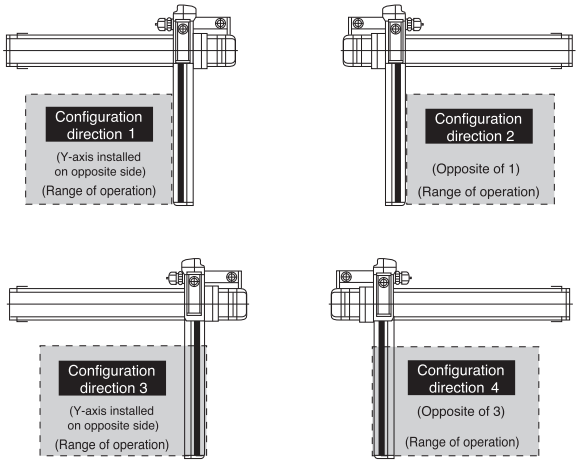

Applicable Controller Specifications

Applicable controller	Maximum number of controlled axes	Compatible encoder type	Program operation	Positioner operation	Pulse-train control	Supply voltage	Page
X-SEL(-P/Q)	4(6) axes	Absolute/incremental	○	△		AC100/230V	234
S-SEL	2 axes	Absolute/incremental	○	△		AC100/230V	-
S-/E-CON	1 axis	Absolute/incremental		○ / ○	○ / -	AC100/230V	- / 226

Caution

(Note 1) The maximum speed will vary depending on the stroke. (Refer to the table of maximum speed by stroke.)
(Note 2) The load capacity assumes operation at the rated acceleration (0.3 G). The actuator can be operated at accelerations beyond the rated acceleration, but the load capacity will decrease (refer to the table of load capacity by acceleration).
(Notes 3, 4, 5) The figures in brackets apply to the ICSPA2.
(Note 6) The cable length measures from the X-axis connector box to the controller. The standard lengths are 3 m and 5 m, but other lengths can also be specified in meters up to 20 m (e.g., 10L = 10 m).

* Refer to page 59 for other points to note.

Self-standing Cable Specification (Cable Management Code: SC)

Dimensions

* Note that changing the home direction will require the actuator to be returned to IAI for adjustment.

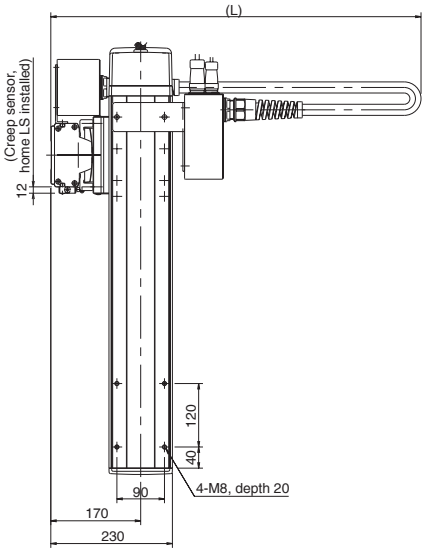

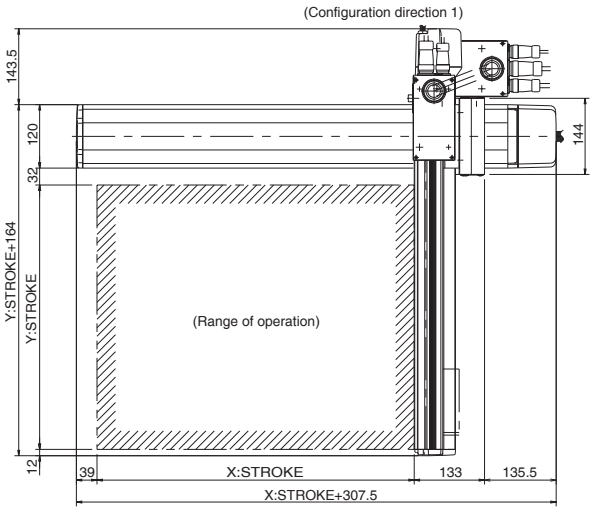

Dimension L							
Yst \ Xst	200	300	400	500	600	700	800
100	550	600	650	700	750	800	850
200	600	650	700	750	800	850	900
300	650	700	750	800	850	900	950
400	700	750	800	850	900	950	1000
500	750	800	850	900	950	1000	1050

X stroke	200	300	400	500	600	700	800
A	104	204	104	204	104	204	104
B	1	1	2	2	3	3	4
C	6	6	8	8	10	10	12

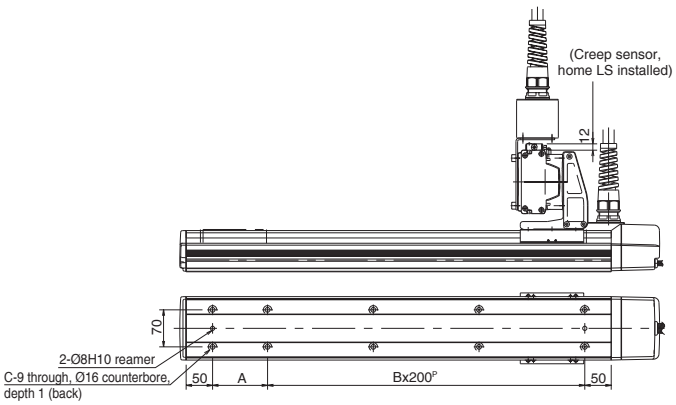

* Note that changing the home direction will require the actuator to be returned to IAI for adjustment.

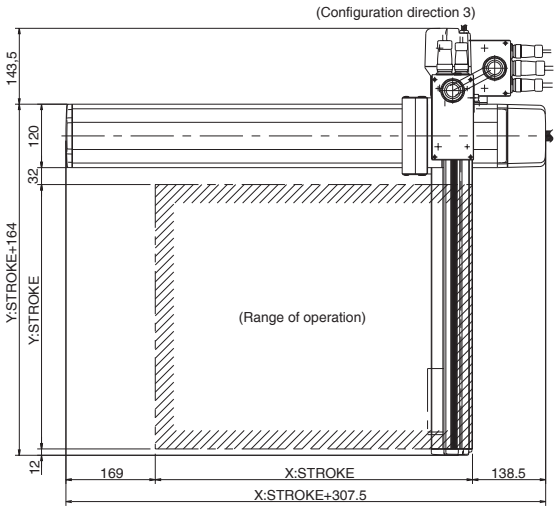

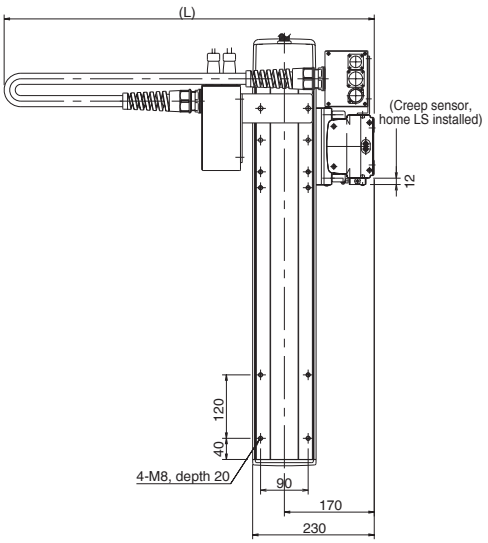

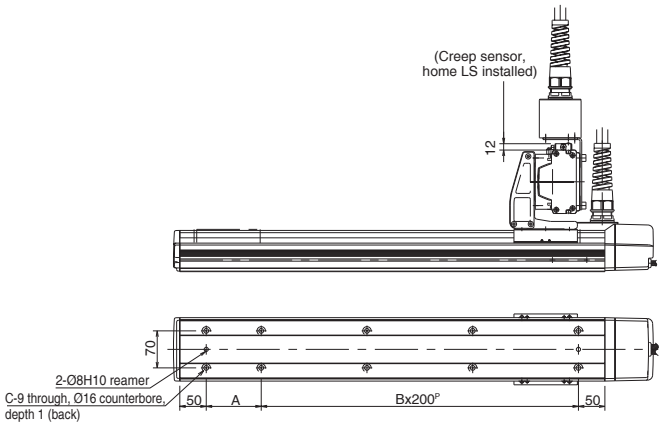

Dimension L							
Yst \ Xst	200	300	400	500	600	700	800
100	550	600	650	700	750	800	850
200	600	650	700	750	800	850	900
300	650	700	750	800	850	900	950
400	700	750	800	850	900	950	1000
500	750	800	850	900	950	1000	1050

X stroke	200	300	400	500	600	700	800
A	104	204	104	204	104	204	104
B	1	1	2	2	3	3	4
C	6	6	8	8	10	10	12

ICSA2-SG□H
Cartesian Robot: X-Y 2-Axes Configuration, XYS (Y-Axis Slider Mount) Type

ICSPA2-SG□H
Cartesian Robot: X-Y 2-Axes Configuration, XYS (Y-Axis Slider Mount) Type High-Precision Specification

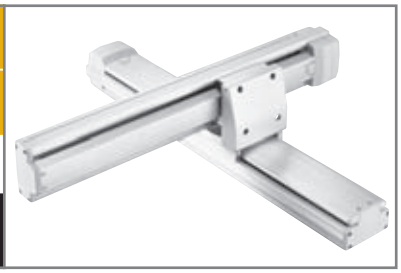

Type: XYS type

Stroke: X-axis: 300~800mm Y-axis: 300~600mm

Load capacity: 20.7kg ~ 8.4kg

■ Model specification items

Series	Type	Encoder type	X-axis stroke + options	Y-axis stroke + options	Applicable controller	Cable length	Cable management
ICSA2 –	SG1H –	A –	80AQLNM –	60AQL –	T1 –	5L –	SC

* Refer to page 61 for the details of model specification items.

Models/Specifications

Model	Axis configuration		Encoder type	Motor output (W)	Lead (mm)	Stroke (mm) In increments of 100mm	Speed (mm/s)	Load capacity (Note 1)	Positioning repeatability (mm) (Note 2)
ICSA2 [ICSPA2] -SG□H-A-＊＊＊-＊＊＊-T1-△-SC	X-axis	ISA [ISPA] -LXM-A-200-20-＊＊＊-T1	Absolute	200	20	300 ~ 800	1 ~ 1000	20.7 ~ 8.4	±0.02 [±0.01]
	Y-axis	ISA [ISPA] -LYM-A-200-20-＊＊＊-T1				300 ~ 600			
ICSA2 [ICSPA2] -SG□H-I-＊＊＊-＊＊＊-T1-△-SC	X-axis	ISA [ISPA] -LXM-I-200-20-＊＊＊-T1	Incremental			300 ~ 800			
	Y-axis	ISA [ISPA] -LYM-I-200-20-＊＊＊-T1				300 ~ 600			

* In the above model names, □ indicates the configuration direction, ＊＊＊ the stroke/applicable options (stroke is specified in centimeters), △ the cable length.

Options

Name	Code	Page	Remarks
AQ seal	AQ	➔ P13	
Brake	B	➔ P13	
Creep sensor	C	➔ P13	
Home limit switch	L	➔ P14	
Reverse homing specification	NM	➔ P14	
Guide with ball-retaining mechanism	RT	➔ P14	

Common Specifications

Drive system (Note 3)	Ball screw, rolled C10 [equivalent to rolled C5]
Backlash (Note 4)	0.05mm or less [0.02mm or less]
Guide	Integrated with base
Base	Material: Aluminum with white alumite treatment
Cable length (Note 5)	3L: 3m, 5L: 5m, □L : Length specification
Cable management	SC: Self-standing cable

Load Capacity by Acceleration (kg)

Acceleration (G) \ Y-axis stroke (mm)	300	400	500	600
0.3	20.7	18.2	12.5	8.4
0.4	10.7	9.1	7.5	6.0
0.5	4.7	3.1	1.5	
0.6	0.7			
0.7				
0.8				
0.9				
1.0				

Maximum Speed by Stroke (mm/sec)

Axis \ Stroke (mm)	300 ~ 600	700 ~ 800
X-axis	1000	
Y-axis	1000	–

Configuration direction

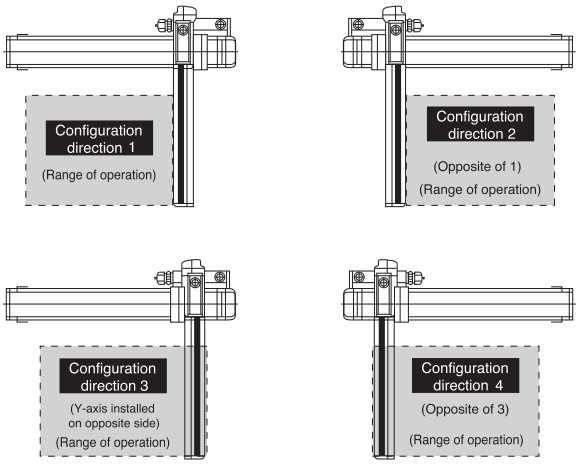

Applicable Controller Specifications

Applicable controller	Maximum number of controlled axes	Compatible encoder type	Program operation	Positioner operation	Pulse-train control	Supply voltage	Page
X-SEL(-P/Q)	4(6) axes	Absolute/incremental	○	△		AC100/230V	234
S-SEL	2 axes	Absolute/incremental	○	△		AC100/230V	-
S-/E-CON	1 axis	Absolute/incremental		○ / ○	○ / -	AC100/230V	- / 226

Caution

(Note 1) The load capacity assumes operation at the rated acceleration (0.3 G). The actuator can be operated at accelerations beyond the rated acceleration, but the load capacity will decrease (refer to the table of load capacity by acceleration).
(Notes 2, 3, 4) The figures in brackets apply to the ICSPA2.
(Note 5) The cable length measures from the X-axis connector box to the controller. The standard lengths are 3 m and 5 m, but other lengths can also be specified in meters up to 20 m (e.g., 10L = 10 m).

* Refer to page 59 for other points to note.

Self-standing Cable Specification (Cable Management Code: SC)

Dimensions

* Note that changing the home direction will require the actuator to be returned to IAI for adjustment.

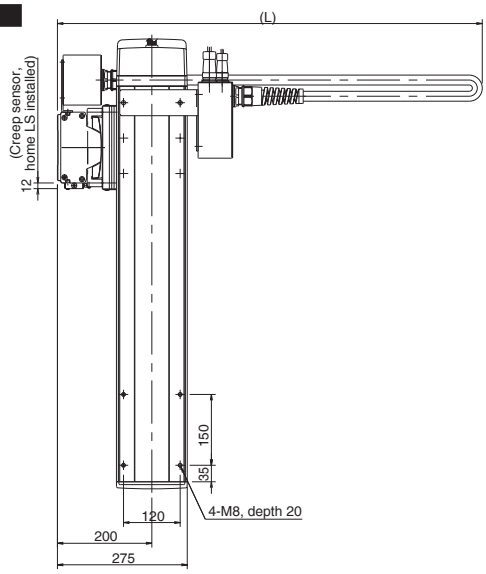

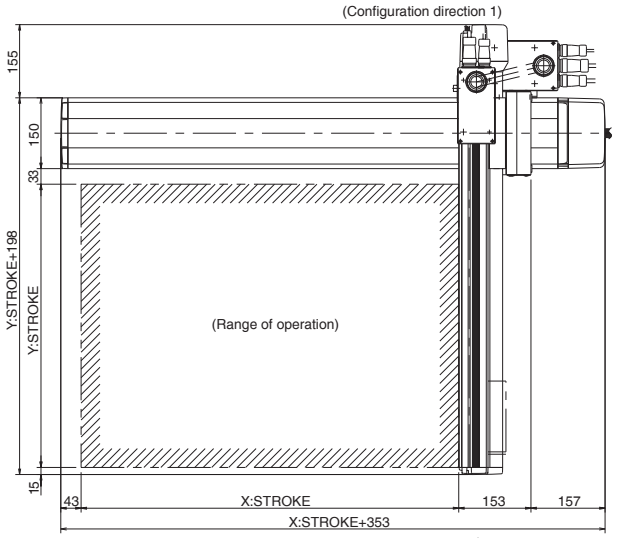

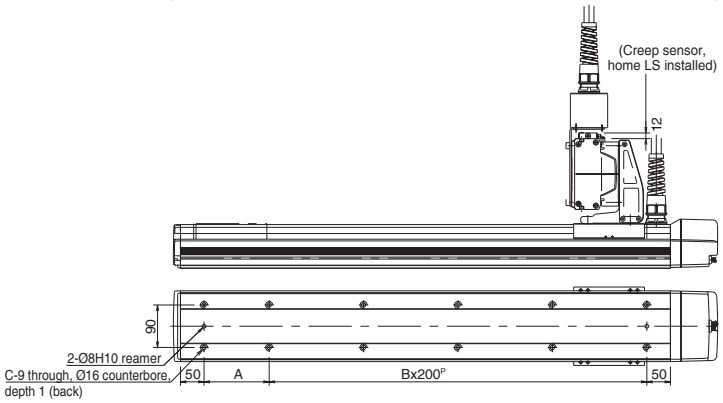

Dimension L						
Yst \ Xst	300	400	500	600	700	800
300	700	750	800	850	900	950
400	750	800	850	900	950	1000
500	800	850	900	950	1000	1050
600	850	900	950	1000	1050	1100

X stroke	300	400	500	600	700	800
A	238	138	238	138	238	138
B	1	2	2	3	3	4
C	6	8	8	10	10	12

* Note that changing the home direction will require the actuator to be returned to IAI for adjustment.

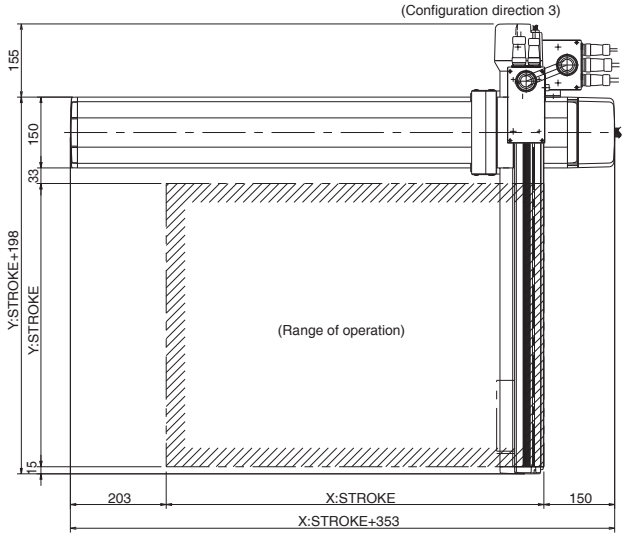

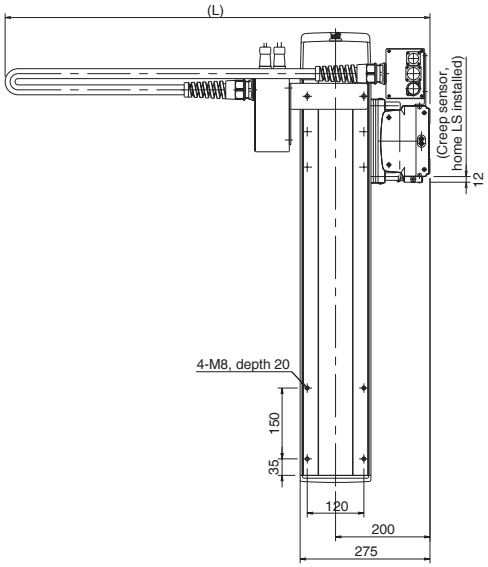

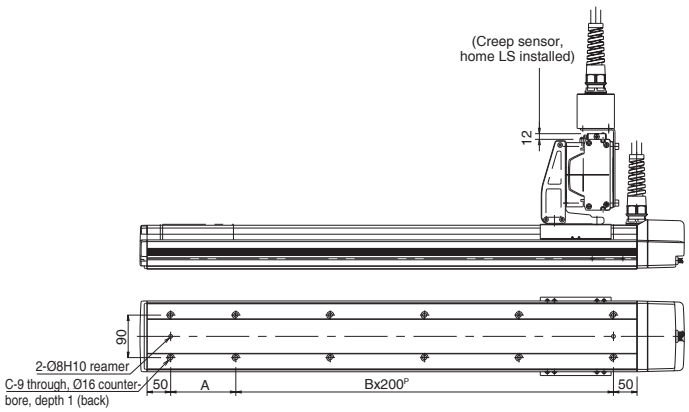

Dimension L						
Yst \ Xst	300	400	500	600	700	800
300	700	750	800	850	900	950
400	750	800	850	900	950	1000
500	800	850	900	950	1000	1050
600	850	900	950	1000	1050	1100

X stroke	300	400	500	600	700	800
A	238	138	238	138	238	138
B	1	2	2	3	3	4
C	6	8	8	10	10	12

ICSA2-ZAH Cartesian Robot: X-Z 2-Axes Configuration, XZ (Z-Axis Base Mount) Type

ICSPA2-ZAH Cartesian Robot: X-Z 2-Axes Configuration, XZ (Z-Axis Base Mount) Type High-Precision Specification

Type	Stroke	Load capacity
XZ type	X-axis: 100~600mm Z-axis: 100~300mm	4kg ~ 2.6kg

■ Model specification items

Series	Type	Encoder type	X-axis stroke + options	Z-axis stroke + options	Applicable controller	Cable length	Cable management
ICSA2 – ZAH –	A	Đ	60AQLNM	– 30AQBL	– T1	– 5L	– CT

* Refer to page 61 for the details of model specification items.

Models/Specifications

Model	Axis configuration		Encoder type	Motor output (W)	Lead (mm)	Stroke (mm) In increments of 100mm	Speed (mm/s)	Load capacity (Note 1)	Positioning repeatability (mm) (Note 2)
ICSA [ICSPA2] -ZAH-A-✻✻✻-✻✻✻B-T1-△-CT	X-axis	ISA [ISA] -SXM-A-60-16-✻✻✻-T1	Absolute	60	16	100 ~ 600	1 ~ 800	4 ~ 2.6	±0.02 [±0.01]
	Z-axis	ISA [ISA] -SZM-A-60-8-✻✻✻-T1-B			8	100 ~ 300	1 ~ 400		
ICSA [ICSPA2] -ZAH-I-✻✻✻-✻✻✻B-T1-△-CT	X-axis	ISA [ISA] -SXM-I-60-16-✻✻✻-T1	Incremental		16	100 ~ 600	1 ~ 800		
	Z-axis	ISA [ISA] -SZM-I-60-8-✻✻✻-T1-B			8	100 ~ 300	1 ~ 400		

* In the above model names, ✻✻✻ indicates the stroke/applicable options (stroke is specified in centimeters), and △ the cable length.

Options

Name	Code	Page	Remarks
AQ seal	AQ	➔ P13	
Brake	B	➔ P13	Standard equipment on Z-axis
Creep sensor	C	➔ P13	
Home limit switch	L	➔ P14	
Reverse homing specification	NM	➔ P14	
Guide with ball-retaining mechanism	RT	➔ P14	

Common Specifications

Drive system (Note 3)	Ball screw, rolled C10 [equivalent to rolled C5]
Backlash (Note 4)	0.05mm or less [0.02mm or less]
Guide	Integrated with base
Base	Material: Aluminum with white alumite treatment
Cable length (Note 5)	3L: 3m, 5L: 5m, □L : Length specification
Cable management	CT: Cable track

Load Capacity by Acceleration (kg)

Acceleration (G) \ Z-axis stroke (mm)	100	200	300
0.3	4.0	3.3	2.6
0.4	1.0	0.3	
0.5			
0.6			
0.7			
0.8			
0.9			
1.0			

Maximum Speed by Stroke (mm/sec)

Axis \ Stroke (mm)	100 ~ 300	400 ~ 600
X-axis	800	
Z-axis	400	–

Applicable Controller Specifications

Applicable controller	Maximum number of controlled axes	Compatible encoder type	Program operation	Positioner operation	Pulse-train control	Supply voltage	Page
X-SEL(-P/Q)	4(6) axes	Absolute/incremental	○	△		AC100/230V	234
S-SEL	2 axes	Absolute/incremental	○	△		AC100/230V	-
S-/E-CON	1 axis	Absolute/incremental		○ / ○	○ / -	AC100/230V	- / 226

Caution

(Note 1) The load capacity assumes operation at the rated acceleration (0.3 G). The actuator can be operated at accelerations beyond the rated acceleration, but the load capacity will decrease (refer to the table of load capacity by acceleration).
(Notes 2, 3, 4) The figures in brackets apply to the ICSPA2.
(Note 5) The cable length measures from the X-axis connector box to the controller. The standard lengths are 3 m and 5 m, but other lengths can also be specified in meters up to 20 m (e.g., 10L = 10 m).

* Refer to page 59 for other points to note.

Cable Track Specification (Cable Management Code: CT)

Dimensions

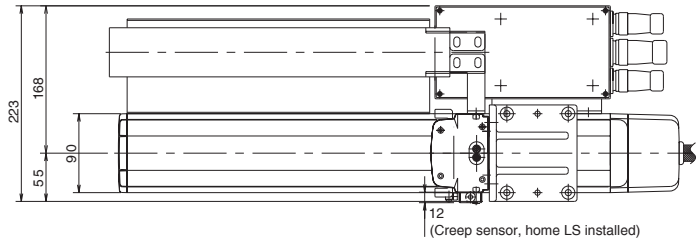

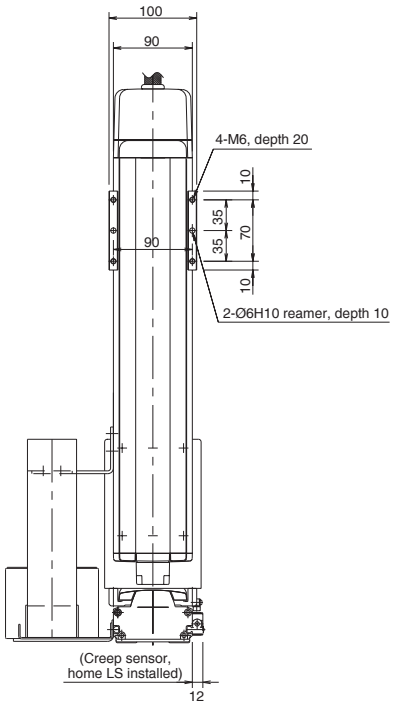

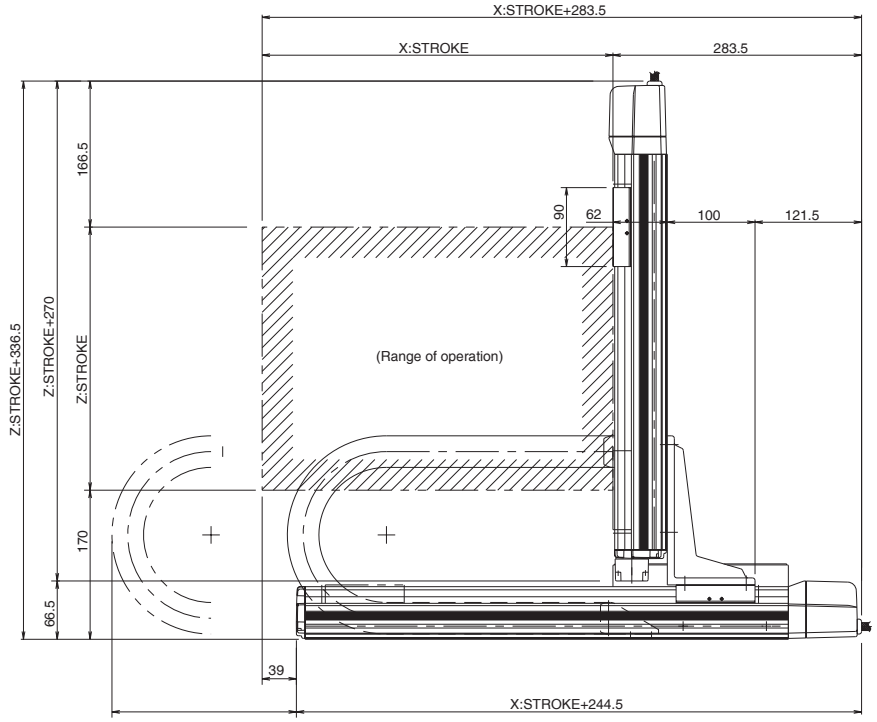

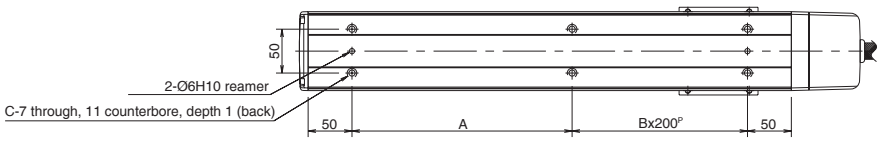

X stroke	100	200	300	400	500	600
A	151	251	151	251	151	251
B	0	0	1	1	2	2
C	4	4	6	6	8	8

ICSA2-ZAM
Cartesian Robot: X-Z 2-Axes Configuration, XZ (Z-Axis Base Mount) Type

ICSPA2-ZAM
Cartesian Robot: X-Z 2-Axes Configuration, XZ (Z-Axis Base Mount) Type High-Precision Specification

Type	Stroke	Load capacity
XZ type	X-axis: 100~600mm Z-axis: 100~300mm	10kg ~ 6kg

■Model specification items

Series	Type	Encoder type	X-axis stroke + options	Z-axis stroke + options	Applicable controller	Cable length	Cable management
ICSA2 –	ZAM –	A	– 60AQLNM	– 30AQBL	– T1	– 5L	– CT

* Refer to page 61 for the details of model specification items.

Models/Specifications

Model	Axis configuration		Encoder type	Motor output (W)	Lead (mm)	Stroke (mm) In increments of 100mm	Speed (mm/s)	Load capacity (Note 1)	Positioning repeatability (mm) (Note 2)
ICSA2 [ICSPA2] -ZAM-A-✻✻✻-✻✻✻B-T1-△-CT	X-axis	ISA [ISPA] -SXM-A-60-8-✻✻✻-T1	Absolute	60	8	100 ~ 600	1 ~ 400	10 ~ 6	±0.02 [±0.01]
	Z-axis	ISA [ISPA] -SZM-A-60-4-✻✻✻-T1-B			4	100 ~ 300	1 ~ 200		
ICSA2 [ICSPA2] -ZAM-I-✻✻✻-✻✻✻B-T1-△-CT	X-axis	ISA [ISPA] -SXM-I-60-8-✻✻✻-T1	Incremental		8	100 ~ 600	1 ~ 400		
	Z-axis	ISA [ISPA] -SZM-I-60-4-✻✻✻-T1-B			4	100 ~ 300	1 ~ 200		

* In the above model names, ✻✻✻ indicates the stroke/applicable options (stroke is specified in centimeters), and △ the cable length.

Options

Name	Code	Page	Remarks
AQ seal	AQ	➔ P13	
Brake	B	➔ P13	Standard equipment on Z-axis
Creep sensor	C	➔ P13	
Home limit switch	L	➔ P14	
Reverse homing specification	NM	➔ P14	
Guide with ball-retaining mechanism	RT	➔ P14	

Common Specifications

Drive system (Note 3)	Ball screw, rolled C10 [equivalent to rolled C5]
Backlash (Note 4)	0.05mm or less [0.02mm or less]
Guide	Integrated with base
Base	Material: Aluminum with white alumite treatment
Cable length (Note 5)	3L: 3m, 5L: 5m, □L : Length specification
Cable management	CT: Cable track

Load Capacity by Acceleration (kg)

Acceleration (G) \ Z-axis stroke (mm)	100	200	300
0.3	10.0	7.5	6.0
0.4	8.5	6.0	4.0
0.5	7.0	4.5	3.0
0.6	4.0	3.3	2.0
0.7			
0.8			
0.9			
1.0			

* Assuming operation of the Z axis at its rated acceleration of 0.15 G, the load capacity varies according to the changes in acceleration of the X axis.

Maximum Speed by Stroke (mm/sec)

Axis \ Stroke (mm)	100 ~ 300	400 ~ 600
X-axis	400	
Z-axis	200	–

Applicable Controller Specifications

Applicable controller	Maximum number of controlled axes	Compatible encoder type	Program operation	Positioner operation	Pulse-train control	Supply voltage	Page
X-SEL(-P/Q)	4(6) axes	Absolute/incremental	○	△		AC100/230V	234
S-SEL	2 axes	Absolute/incremental	○	△		AC100/230V	-
S-/E-CON	1 axis	Absolute/incremental		○ / ○	○ / -	AC100/230V	- / 226

Caution

(Note 1) The load capacity assumes operation at the rated acceleration (0.3 G for the X-axis, 0.15 G for the Z-axis). The actuator can be operated at accelerations beyond the rated acceleration, but the load capacity will decrease (refer to the table of load capacity by acceleration).
(Notes 2, 3, 4) The figures in brackets apply to the ICSPA2.
(Note 5) The cable length measures from the X-axis connector box to the controller. The standard lengths are 3 m and 5 m, but other lengths can also be specified in meters up to 20 m (e.g., 10L = 10 m).

* Refer to page 59 for other points to note.

Cable Track Specification (Cable Management Code: CT)

Dimensions

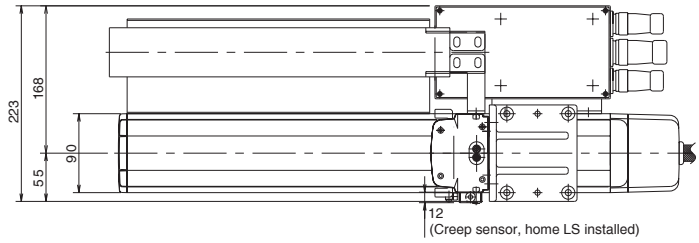

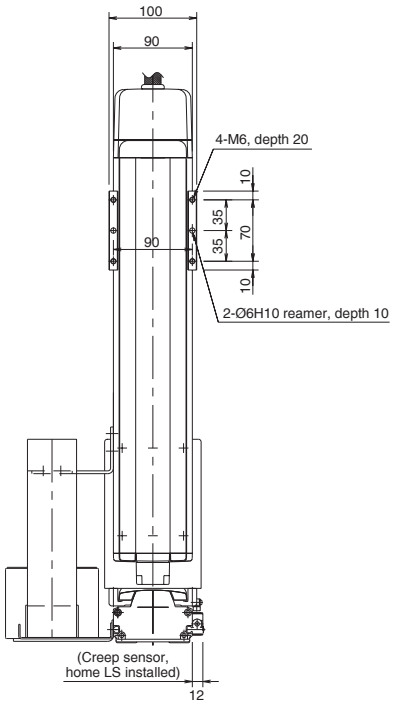

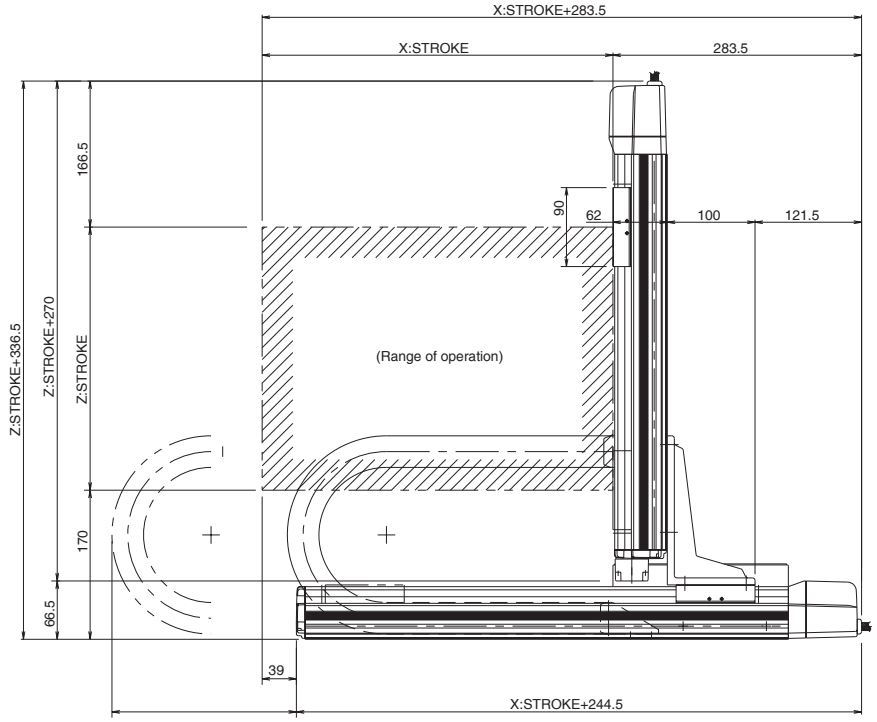

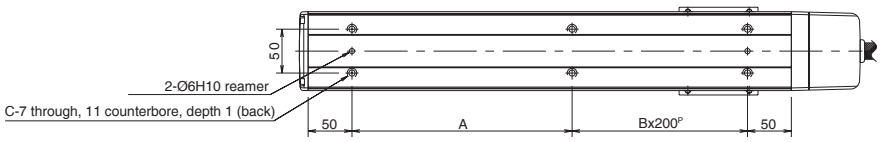

X stroke	100	200	300	400	500	600
A	151	251	151	251	151	251
B	0	0	1	1	2	2
C	4	4	6	6	8	8

ICSA2-Z1CH
Cartesian Robot: X-Z 2-Axes Configuration, XZ (Z-Axis Base Mount) Type

ICSPA2-Z1CH
Cartesian Robot: X-Z 2-Axes Configuration, XZ (Z-Axis Base Mount) Type High-Precision Specification

Type: XZ type | Stroke: X-axis: 200~800mm Z-axis: 100~400mm | Load capacity: 8.5kg ~ 5.5kg

■ Model specification items

Series	Type	Encoder type	X-axis stroke + options	Z-axis stroke + options	Applicable controller	Cable length	Cable management
ICSA2 – Z1CH –	A	– 80AQLNM –	40AQBL	– T1	– 5L	– CT	

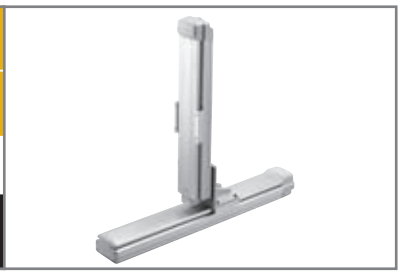

* Refer to page 61 for the details of model specification items.

Models/Specifications

Model	Axis configuration		Encoder type	Motor output (W)	Lead (mm)	Stroke (mm) In increments of 100mm	Speed (mm/s) (Note 1)	Load capacity (Note 2)	Positioning repeatability (mm) (Note 3)
ICSA2 [ICSPA2] -Z1CH-A-✻✻✻-✻✻✻B-T1-△-CT	X-axis	ISA [ISPA] -MXM-A-100-20-✻✻✻-T1	Absolute	100	20	200 ~ 800	1 ~ 1000	8.5 ~ 5.5	±0.02 [±0.01]
	Z-axis	ISA [ISPA] -MZM-A-100-10-✻✻✻-T1-B			10	100 ~ 400	1 ~ 500		
ICSA2 [ICSPA2] -Z1CH-I-✻✻✻-✻✻✻B-T1-△-CT	X-axis	ISA [ISPA] -MXM-I-100-20-✻✻✻-T1	Incremental		20	200 ~ 800	1 ~ 1000		
	Z-axis	ISA [ISPA] -MZM-I-100-10-✻✻✻-T1-B			10	100 ~ 400	1 ~ 500		

* In the above model names, ✻✻✻ indicates the stroke/applicable options (stroke is specified in centimeters), and △ the cable length.

Options

Name	Code	Page	Remarks
AQ seal	AQ	➔ P13	
Brake	B	➔ P13	Standard equipment on Z-axis
Creep sensor	C	➔ P13	
Home limit switch	L	➔ P14	
Reverse homing specification	NM	➔ P14	
Guide with ball-retaining mechanism	RT	➔ P14	

Common Specifications

Drive system (Note 4)	Ball screw, rolled C10 [equivalent to rolled C5]
Backlash (Note 5)	0.05mm or less [0.02mm or less]
Guide	Integrated with base
Base	Material: Aluminum with white alumite treatment
Cable length (Note 6)	3L: 3m, 5L: 5m, □L : Length specification
Cable management	CT: Cable track

Load Capacity by Acceleration (kg)

Acceleration (G) \ Z-axis stroke (mm)	100	200	300	400
0.3	8.5	7.5	6.5	5.5
0.4	3.5	2.5	1.5	0.5
0.5	0.5			
0.6				
0.7				
0.8				
0.9				
1.0				

Maximum Speed by Stroke (mm/sec)

Axis \ Stroke (mm)	100	200 ~ 400	500 ~ 700	800
X-axis	Ð	1000		795
Z-axis	500		Ð	Ð

Applicable Controller Specifications

Applicable controller	Maximum number of controlled axes	Compatible encoder type	Program operation	Positioner operation	Pulse-train control	Supply voltage	Page
X-SEL(-P/Q)	4(6) axes	Absolute/incremental	○	△		AC100/230V	234
S-SEL	2 axes	Absolute/incremental	○	△		AC100/230V	-
S-/E-CON	1 axis	Absolute/incremental		○ / ○	○ / -	AC100/230V	- / 226

Caution

(Note 1) The maximum speed will vary depending on the stroke. (Refer to the table of maximum speed by stroke.)
(Note 2) The load capacity assumes operation at the rated acceleration (0.3 G). The actuator can be operated at accelerations beyond the rated acceleration, but the load capacity will decrease (refer to the table of load capacity by acceleration).
(Notes 3, 4, 5) The figures in brackets apply to the ICSPA2.
(Note 6) The cable length measures from the X-axis connector box to the controller. The standard lengths are 3 m and 5 m, but other lengths can also be specified in meters up to 20 m (e.g., 10L = 10 m).

* Refer to page 59 for other points to note.

Cable Track Specification (Cable Management Code: CT)

Dimensions

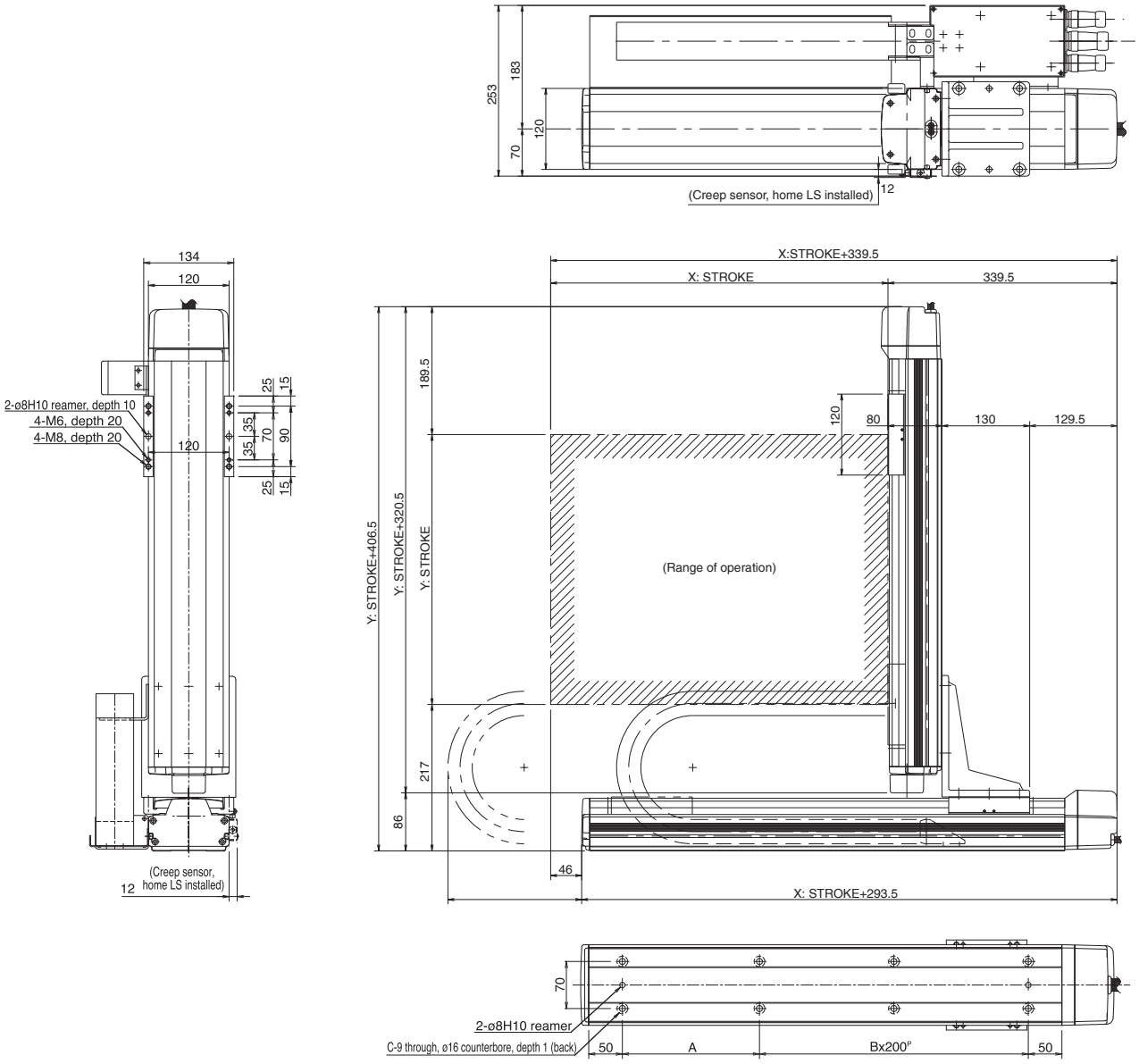

X stroke	200	300	400	500	600	700	800
A	104	204	104	204	104	204	104
B	1	1	2	2	3	3	4
C	6	6	8	8	10	10	12

ICSA2-Z1CM
Cartesian Robot: X-Z 2-Axes Configuration, XZ (Z-Axis Base Mount) Type

ICSPA2-Z1CM
Cartesian Robot: X-Z 2-Axes Configuration, XZ (Z-Axis Base Mount) Type High-Precision Specification

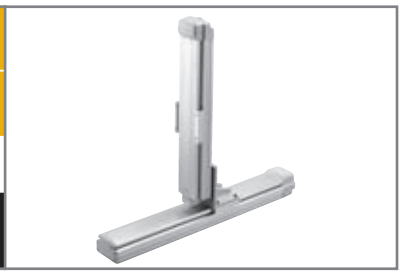

Type: XZ type | Stroke: X-axis: 200~800mm Z-axis: 100~400mm | Load capacity: 19kg ~ 12kg

■ Model specification items

Series	Type	Encoder type	X-axis stroke + options	Z-axis stroke + options	Applicable controller	Cable length	Cable management
ICSA2	Z1CM	A	80AQLNM	40AQBL	T1	5L	CT

* Refer to page 61 for the details of model specification items.

Models/Specifications

Model	Axis configuration		Encoder type	Motor output (W)	Lead (mm)	Stroke (mm) In increments of 100mm	Speed (mm/s) (Note 1)	Load capacity (Note 2)	Positioning repeatability (mm) (Note 3)
ICSA2 [ICSPA2] -Z1CM-A-＊＊＊-＊＊＊B-T1-△-CT	X-axis	ISA [ISPA] -MXM-A-100-10-＊＊＊-T1	Absolute	100	10	200 ~ 800	1 ~ 500	19 ~ 12	±0.02 [±0.01]
	Z-axis	ISA [ISPA] -MZM-A-100-5-＊＊＊-T1-B			5	100 ~ 400	1 ~ 250		
ICSA2 [ICSPA2] -Z1CM-I-＊＊＊-＊＊＊B-T1-△-CT	X-axis	ISA [ISPA] -MXM-I-100-10-＊＊＊-T1	Incremental		10	200 ~ 800	1 ~ 500		
	Z-axis	ISA [ISPA] -MZM-I-100-5-＊＊＊-T1-B			5	100 ~ 400	1 ~ 250		

* In the above model names, ＊＊＊ indicates the stroke/applicable options (stroke is specified in centimeters), and △ the cable length.

Options

Name	Code	Page	Remarks
AQ seal	AQ	➔ P13	
Brake	B	➔ P13	Standard equipment on Z-axis
Creep sensor	C	➔ P13	
Home limit switch	L	➔ P14	
Reverse homing specification	NM	➔ P14	
Guide with ball-retaining mechanism	RT	➔ P14	

Common Specifications

Drive system (Note 4)	Ball screw, rolled C10 [equivalent to rolled C5]
Backlash (Note 5)	0.05mm or less [0.02mm or less]
Guide	Integrated with base
Base	Material: Aluminum with white alumite treatment
Cable length (Note 6)	3L: 3m, 5L: 5m, □L : Length specification
Cable management	CT: Cable track

Load Capacity by Acceleration (kg)

Acceleration (G) \ Z-axis stroke (mm)	100	200	300	400
0.3	19.0	17.0	14.0	12.0
0.4	18.5	14.0	11.0	9.0
0.5	12.5	11.5	9.0	7.0
0.6	8.5	7.5	6.5	5.0
0.7				
0.8				
0.9				
1.0				

* Assuming operation of the Z axis at its rated acceleration of 0.15 G, the load capacity varies according to the changes in acceleration of the X axis.

Maximum Speed by Stroke (mm/sec)

Axis \ Stroke (mm)	100	200 ~ 400	500 ~ 600	700	800
X-axis	–	500		480	380
Z-axis	250		–	–	–

Applicable Controller Specifications

Applicable controller	Maximum number of controlled axes	Compatible encoder type	Program operation	Positioner operation	Pulse-train control	Supply voltage	Page
X-SEL(-P/Q)	4(6) axes	Absolute/incremental	○	△		AC100/230V	234
S-SEL	2 axes	Absolute/incremental	○	△		AC100/230V	-
S-/E-CON	1 axis	Absolute/incremental		○ / ○	○ / -	AC100/230V	- / 226

Caution

(Note 1) The maximum speed will vary depending on the stroke. (Refer to the table of maximum speed by stroke.)
(Note 2) The load capacity assumes operation at the rated acceleration (0.3 G for the X-axis, 0.15 G for the Z-axis). The actuator can be operated at accelerations beyond the rated acceleration, but the load capacity will decrease (refer to the table of load capacity by acceleration).
(Notes 3, 4, 5) The figures in brackets apply to the ICSPA2.
(Note 6) The cable length measures from the X-axis connector box to the controller. The standard lengths are 3 m and 5 m, but other lengths can also be specified in meters up to 20 m (e.g., 10L = 10 m).

* Refer to page 59 for other points to note.

Cable Track Specification (Cable Management Code: CT)

Dimensions

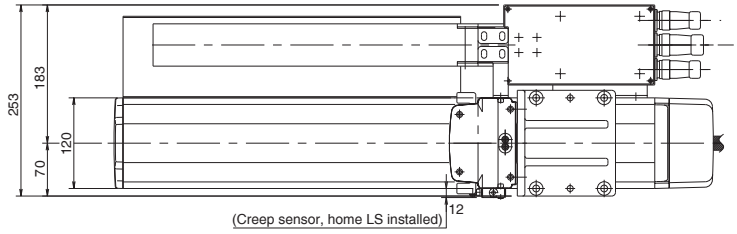

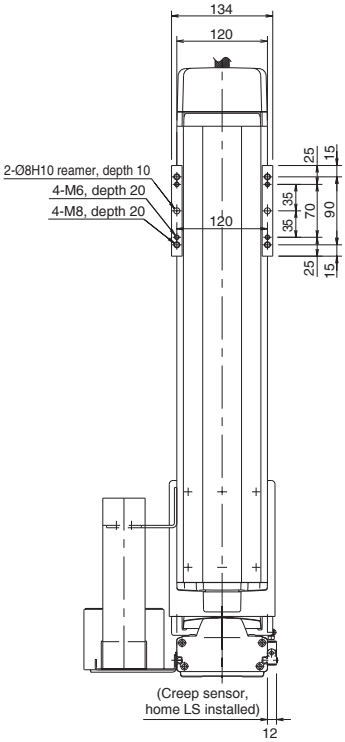

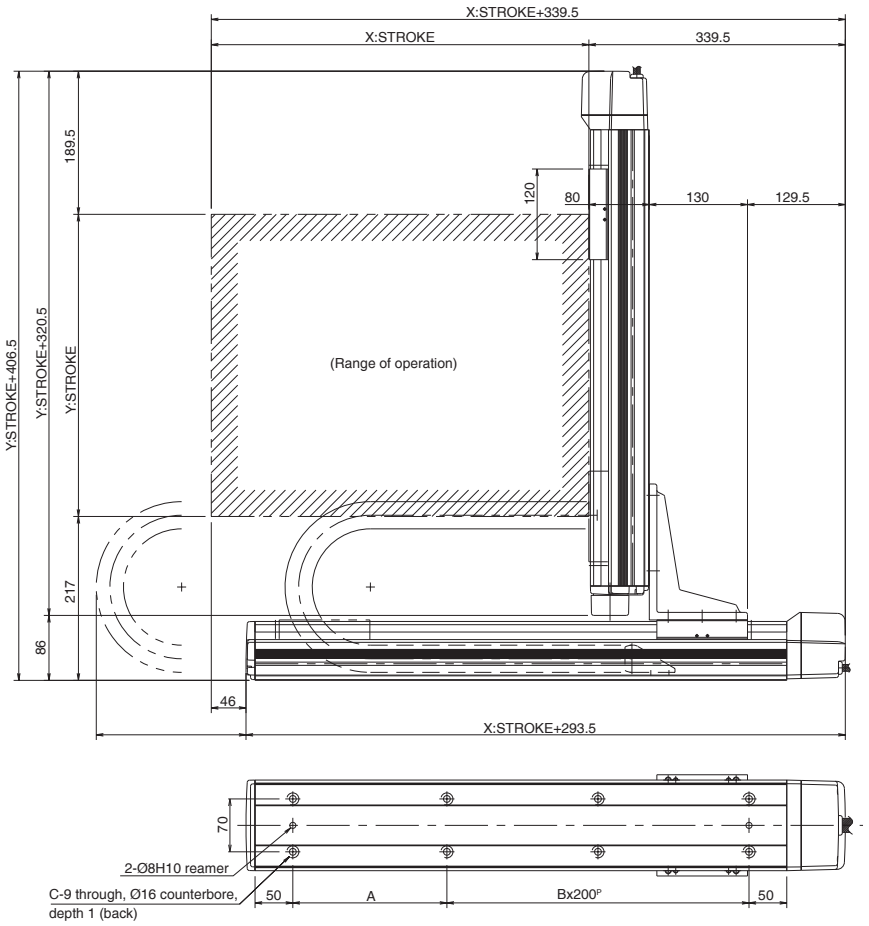

X stroke	200	300	400	500	600	700	800
A	104	204	104	204	104	204	104
B	1	1	2	2	3	3	4
C	6	6	8	8	10	10	12

ICSA2-Z2CH
Cartesian Robot: X-Z 2-Axes Configuration, XZ (Z-Axis Base Mount) Type

ICSPA2-Z2CH
Cartesian Robot: X-Z 2-Axes Configuration, XZ (Z-Axis Base Mount) Type High-Precision Specification

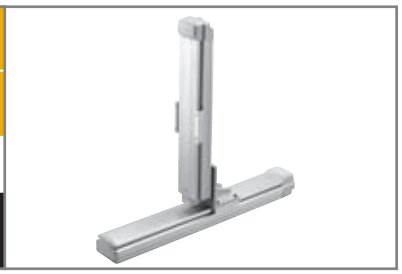

Type: XZ type | Stroke: X-axis: 200~800mm Z-axis: 100~400mm | Load capacity: 19kg ~ 11kg

■ Model specification items

Series	Type	Encoder type	X-axis stroke + options	Z-axis stroke + options	Applicable controller	Cable length	Cable management
ICSA2	Z2CH	A	80AQLNM	40AQBL	T1	5L	CT

* Refer to page 61 for the details of model specification items.

Models/Specifications

Model	Axis configuration		Encoder type	Motor output (W)	Lead (mm)	Stroke (mm) In increments of 100mm	Speed (mm/s) (Note 1)	Load capacity (Note 2)	Positioning repeatability (mm) (Note 3)
ICSA2 [ICSPA2] -Z2CH-A-＊＊＊-＊＊＊B-T1-△-CT	X-axis	ISA [ISPA] -MXM-A-200-20-＊＊＊-T1	Absolute	200	20	200 ~ 800	1 ~ 1000	19 ~ 11	±0.02 [±0.01]
	Z-axis	ISA [ISPA] -MZM-A-200-10-＊＊＊-T1-B			10	100 ~ 400	1 ~ 500		
ICSA2 [ICSPA2] -Z2CH-I-＊＊＊-＊＊＊B-T1-△-CT	X-axis	ISA [ISPA] -MXM-I-200-20-＊＊＊-T1	Incremental		20	200 ~ 800	1 ~ 1000		
	Z-axis	ISA [ISPA] -MZM-I-200-10-＊＊＊-T1-B			10	100 ~ 400	1 ~ 500		

* In the above model names, ＊＊＊ indicates the stroke/applicable options (stroke is specified in centimeters), and △ the cable length.

Options

Name	Code	Page	Remarks
AQ seal	AQ	➔ P13	
Brake	B	➔ P13	Standard equipment on Z-axis
Creep sensor	C	➔ P13	
Home limit switch	L	➔ P14	
Reverse homing specification	NM	➔ P14	
Guide with ball-retaining mechanism	RT	➔ P14	

Common Specifications

Drive system (Note 4)	Ball screw, rolled C10 [equivalent to rolled C5]
Backlash (Note 5)	0.05mm or less [0.02mm or less]
Guide	Integrated with base
Base	Material: Aluminum with white alumite treatment
Cable length (Note 6)	3L: 3m, 5L: 5m, □L : Length specification
Cable management	CT: Cable track

Load Capacity by Acceleration (kg)

Acceleration (G) \ Z-axis stroke (mm)	100	200	300	400
0.3	19.0	16.0	13.0	11.0
0.4	16.3	13.0	10.0	8.0
0.5	11.3	10.3	8.0	6.0
0.6				
0.7				
0.8				
0.9				
1.0				

Maximum Speed by Stroke (mm/sec)

Axis \ Stroke (mm)	100	200 ~ 400	500 ~ 700	800
X-axis	–	1000		795
Z-axis	500		–	–

Applicable Controller Specifications

Applicable controller	Maximum number of controlled axes	Compatible encoder type	Program operation	Positioner operation	Pulse-train control	Supply voltage	Page
X-SEL(-P/Q)	4(6) axes	Absolute/incremental	○	△		AC100/230V	234
S-SEL	2 axes	Absolute/incremental	○	△		AC100/230V	-
S-/E-CON	1 axis	Absolute/incremental		○ / ○	○ / -	AC100/230V	- / 226

Caution

(Note 1) The maximum speed will vary depending on the stroke. (Refer to the table of maximum speed by stroke.)
(Note 2) The load capacity assumes operation at the rated acceleration (0.3 G). The actuator can be operated at accelerations beyond the rated acceleration, but the load capacity will decrease (refer to the table of load capacity by acceleration).
(Notes 3, 4, 5) The figures in brackets apply to the ICSPA2.
(Note 6) The cable length measures from the X-axis connector box to the controller. The standard lengths are 3 m and 5 m, but other lengths can also be specified in meters up to 20 m (e.g., 10L = 10 m).

* Refer to page 59 for other points to note.

Cable Track Specification (Cable Management Code: CT)

Dimensions

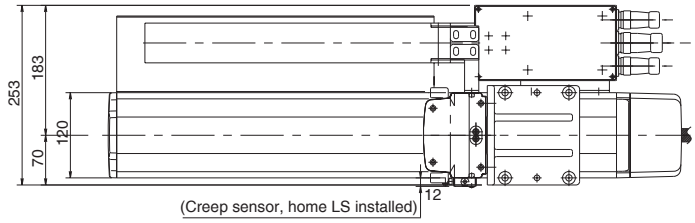

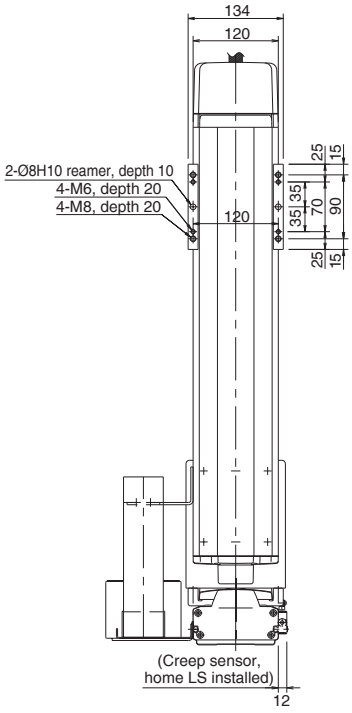

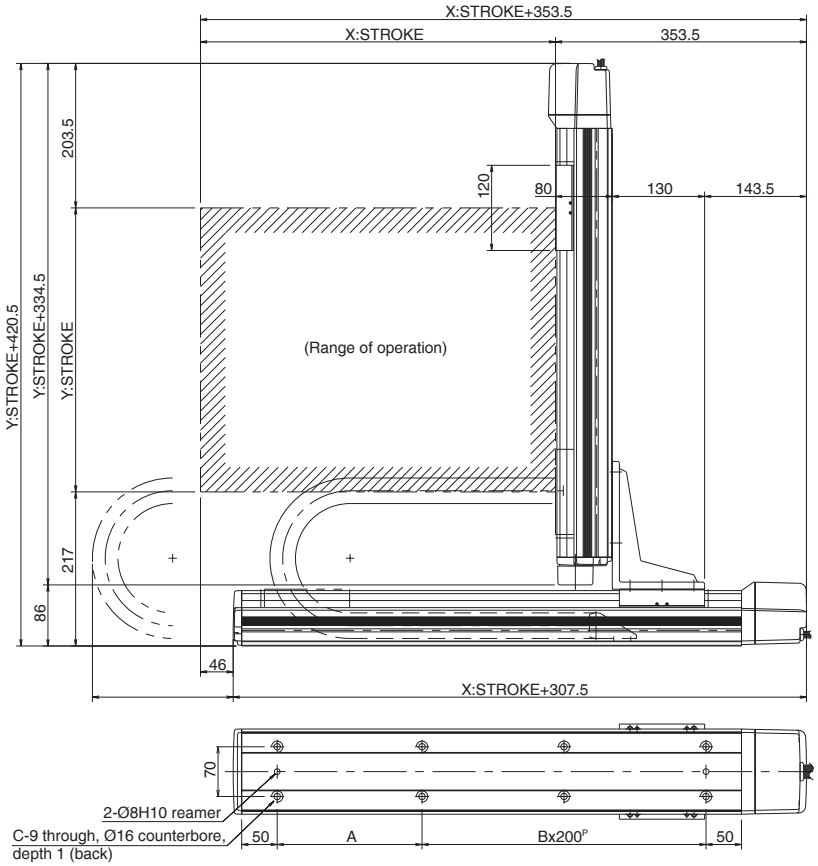

X stroke	200	300	400	500	600	700	800
A	104	204	104	204	104	204	104
B	1	1	2	2	3	3	4
C	6	6	8	8	10	10	12

ICSA2-ZDH
Cartesian Robot: X-Z 2-Axes Configuration, XZ (Z-Axis Base Mount) Type

ICSPA2-ZDH
Cartesian Robot: X-Z 2-Axes Configuration, XZ (Z-Axis Base Mount) Type High-Precision Specification

Type: XZ type

Stroke: X-axis: 800~2000mm Z-axis: 100~400mm

Load capacity: 19kg ~ 11kg

Model specification items

Series	Type	Encoder type	X-axis stroke + options	Z-axis stroke + options	Applicable controller	Cable length	Cable management
ICSA2 – ZDH –	A	–	200AQLNM –	40AQBL –	T1	–	5L – CT

* Refer to page 61 for the details of model specification items.

Models/Specifications

Model	Axis configuration		Encoder type	Motor output (W)	Lead (mm)	Stroke (mm) In increments of 100mm	Speed (mm/s) (Note 1)	Load capacity (Note 2)	Positioning repeatability (mm) (Note 3)
ICSA2 [ICSPA2] -ZDH-A-＊＊＊-＊＊＊B-T1-△-CT	X-axis	ISA [ISPA] -MXMX-A-200-20-＊＊＊-T1	Absolute	200	20	800 ~ 2000	1 ~ 1000	19 ~ 11	±0.02 [±0.01]
	Z-axis	ISA [ISPA] -MZM-A-200-10-＊＊＊-T1-B			10	100 ~ 400	1 ~ 500		
ICSA2 [ICSPA2] -ZDH-I-＊＊＊-＊＊＊B-T1-△-CT	X-axis	ISA [ISPA] -MXMX-I-200-20-＊＊＊-T1	Incremental		20	800 ~ 2000	1 ~ 1000		
	Z-axis	ISA [ISPA] -MZM-I-200-10-＊＊＊-T1-B			10	100 ~ 400	1 ~ 500		

* In the above model names, ＊＊＊ indicates the stroke/applicable options (stroke is specified in centimeters), and △ the cable length.

Options

Name	Code	Page	Remarks
AQ seal	AQ	➔ P13	
Brake	B	➔ P13	Standard equipment on Z-axis
Creep sensor	C	➔ P13	
Home limit switch	L	➔ P14	
Reverse homing specification	NM	➔ P14	
Guide with ball-retaining mechanism	RT	➔ P14	

Common Specifications

Drive system (Note 4)	Ball screw, rolled C10 [equivalent to rolled C5]
Backlash (Note 5)	0.05mm or less [0.02mm or less]
Guide	Integrated with base
Base	Material: Aluminum with white alumite treatment
Cable length (Note 6)	3L: 3m, 5L: 5m, □L : Length specification
Cable management	CT: Cable track

Load Capacity by Acceleration (kg)

Acceleration (G) \ Z-axis stroke (mm)	100	200	300	400
0.3	19.0	16.0	13.0	11.0
0.4				
0.5				
0.6				
0.7				
0.8				
0.9				
1.0				

Maximum Speed by Stroke (mm/sec)

Axis \ Stroke (mm)	100~ 400	800~1300	1400	1500	1600	1700	1800	1900	2000
X-axis	–	1000	950	800	700	600	550	500	450
Z-axis	500		–	–	–	–	–	–	–

Applicable Controller Specifications

Applicable controller	Maximum number of controlled axes	Compatible encoder type	Program operation	Positioner operation	Pulse-train control	Supply voltage	Page
X-SEL(-P/Q)	4(6) axes	Absolute/incremental	○	△		AC100/230V	234
S-SEL	2 axes	Absolute/incremental	○	△		AC100/230V	-
S-/E-CON	1 axis	Absolute/incremental		○ / ○	○ / -	AC100/230V	- / 226

Caution

(Note 1) The maximum speed will vary depending on the stroke. (Refer to the table of maximum speed by stroke.)
(Note 2) The load capacity assumes operation at the rated acceleration (0.3 G). The rated acceleration is the maximum specifiable acceleration for both the ICSA2 and ICSPA2.
(Notes 3, 4, 5) The figures in brackets apply to the ICSPA2.
(Note 6) The cable length measures from the X-axis connector box to the controller. The standard lengths are 3 m and 5 m, but other lengths can also be specified in meters up to 20 m (e.g., 10L = 10 m).

* Refer to page 59 for other points to note.

Cable Track Specification (Cable Management Code: CT)

Dimensions

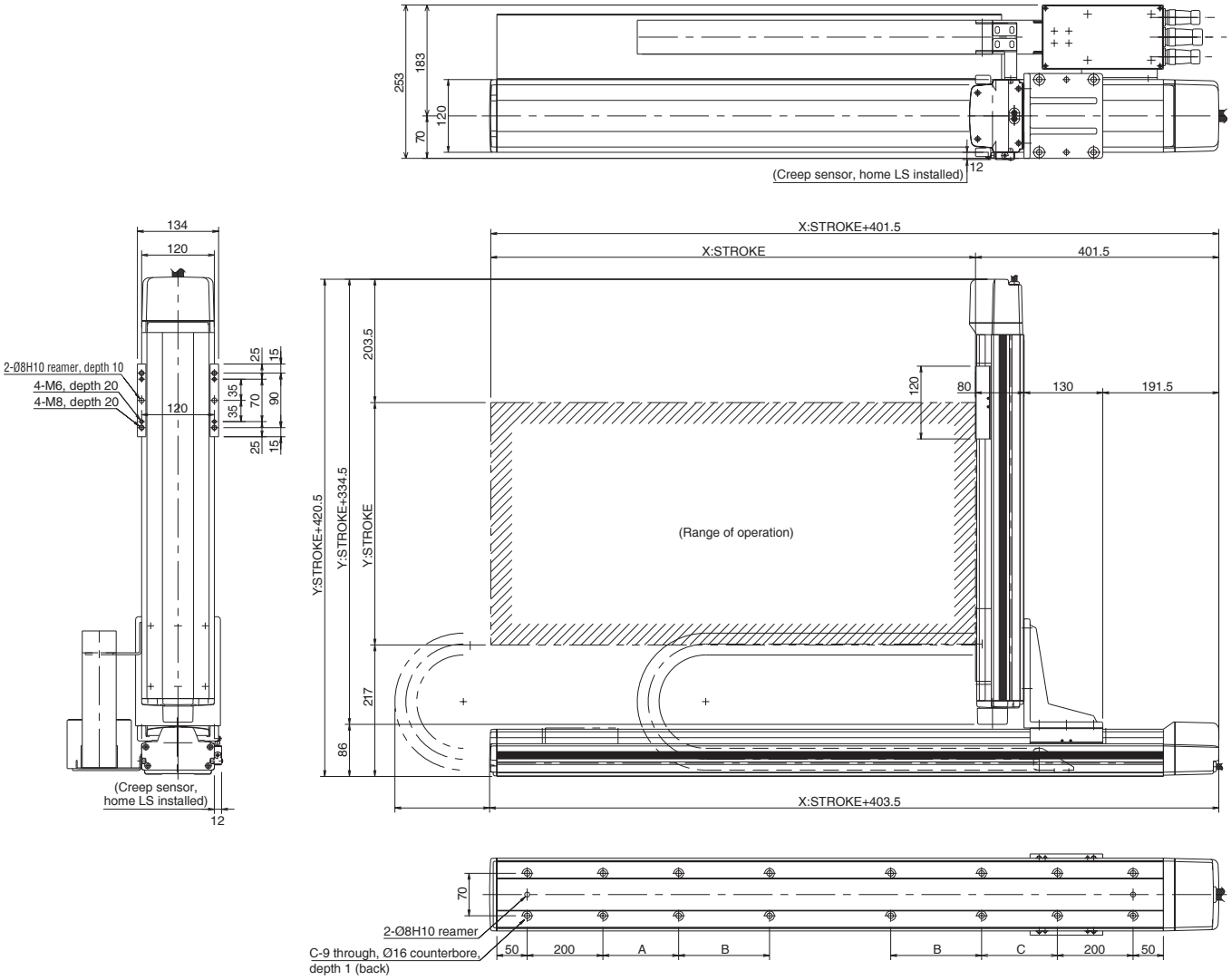

X stroke	800	900	1000	1100	1200	1300	1400	1500	1600	1700	1800	1900	2000
A	0	0	200	250	300	350	400	450	500	550	200	200	200
B	0	0	0	0	0	0	0	0	0	0	400	450	500
C	200	200	200	250	300	350	400	450	500	550	200	200	200
D	10	10	12	12	12	12	12	12	12	12	16	16	16

ICSA2-ZGH
Cartesian Robot: X-Z 2-Axes Configuration, XZ (Z-Axis Base Mount) Type

ICSPA2-ZGH
Cartesian Robot: X-Z 2-Axes Configuration, XZ (Z-Axis Base Mount) Type High-Precision Specification

Type: XZ type | Stroke: X-axis: 200~800mm Z-axis: 100~500mm | Load capacity: 22kg ~ 10kg

■ Model specification items

Series	Type	Encoder type	X-axis stroke + options	Z-axis stroke + options	Applicable controller	Cable length	Cable management
ICSA2	ZGH	A	80AQLNM	50AQBL	T1	5L	CT

* Refer to page 61 for the details of model specification items.

Models/Specifications

Model	Axis configuration		Encoder type	Motor output (W)	Lead (mm)	Stroke (mm) In increments of 100mm	Speed (mm/s)	Load capacity (Note 1)	Positioning repeatability (mm) (Note 2)
ICSA2 [ICSPA2] -ZGH-A-＊＊＊-＊＊＊B-T1-△-CT	X-axis	ISA [ISPA] -LXM-A-400-20-＊＊＊-T1	Absolute	400	20	200 ~ 800	1 ~ 1000	22 ~ 10	±0.02 [±0.01]
	Z-axis	ISA [ISPA] -LZM-A-400-10-＊＊＊-T1-B			10	100 ~ 500	1 ~ 500		
ICSA2 [ICSPA2] -ZGH-I-＊＊＊-＊＊＊B-T1-△-CT	X-axis	ISA [ISPA] -LXM-I-400-20-＊＊＊-T1	Incremental		20	200 ~ 800	1 ~ 1000		
	Z-axis	ISA [ISPA] -LZM-I-400-10-＊＊＊-T1-B			10	100 ~ 500	1 ~ 500		

* In the above model names, ＊＊＊ indicates the stroke/applicable options (stroke is specified in centimeters), and △ the cable length.

Options

Name	Code	Page	Remarks
AQ seal	AQ	➔ P13	
Brake	B	➔ P13	Standard equipment on Z-axis
Creep sensor	C	➔ P13	
Home limit switch	L	➔ P14	
Reverse homing specification	NM	➔ P14	
Guide with ball-retaining mechanism	RT	➔ P14	

Common Specifications

Drive system (Note 3)	Ball screw, rolled C10 [equivalent to rolled C5]
Backlash (Note 4)	0.05mm or less [0.02mm or less]
Guide	Integrated with base
Base	Material: Aluminum with white alumite treatment
Cable length (Note 5)	3L: 3m, 5L: 5m, □L : Length specification
Cable management	CT: Cable track

Load Capacity by Acceleration (kg)

Acceleration (G) \ Z-axis stroke (mm)	100	200	300	400	500
0.3	22.0	18.0	16.0	12.0	10.0
0.4	20.0	16.0	12.0	9.0	6.0
0.5	16.0	12.0	9.0	6.0	3.0
0.6					
0.7					
0.8					
0.9					
1.0					

Maximum Speed by Stroke (mm/sec)

Axis \ Stroke (mm)	100	200 ~ 500	600 ~ 800
X-axis	–	1000	
Z-axis	500		–

Applicable Controller Specifications

Applicable controller	Maximum number of controlled axes	Compatible encoder type	Program operation	Positioner operation	Pulse-train control	Supply voltage	Page
X-SEL(-P/Q)	4(6) axes	Absolute/incremental	○	△		AC100/230V	234
S-SEL	2 axes	Absolute/incremental	○	△		AC100/230V	-
S-/E-CON	1 axis	Absolute/incremental		○ / ○	○ / -	AC100/230V	- / 226

Caution

(Note 1) The load capacity assumes operation at the rated acceleration (0.3 G). The actuator can be operated at accelerations beyond the rated acceleration, but the load capacity will decrease (refer to the table of load capacity by acceleration).
(Notes 2, 3, 4) The figures in brackets apply to the ICSPA2.
(Note 5) The cable length measures from the X-axis connector box to the controller. The standard lengths are 3 m and 5 m, but other lengths can also be specified in meters up to 20 m (e.g., 10L = 10 m).

* Refer to page 59 for other points to note.

Cable Track Specification (Cable Management Code: CT)

Dimensions

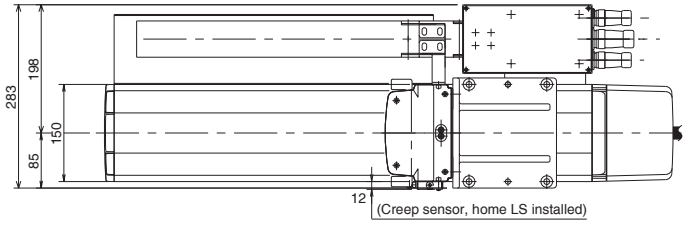

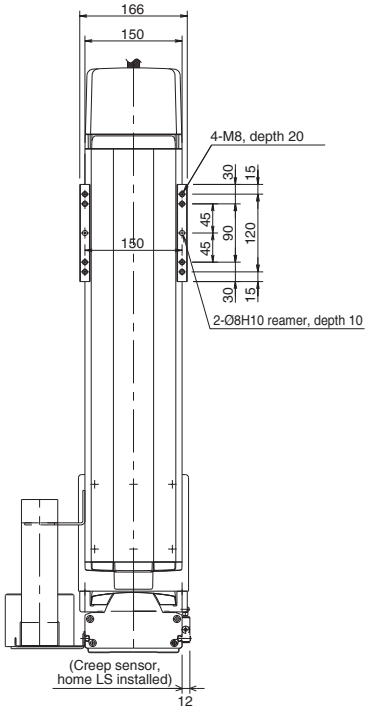

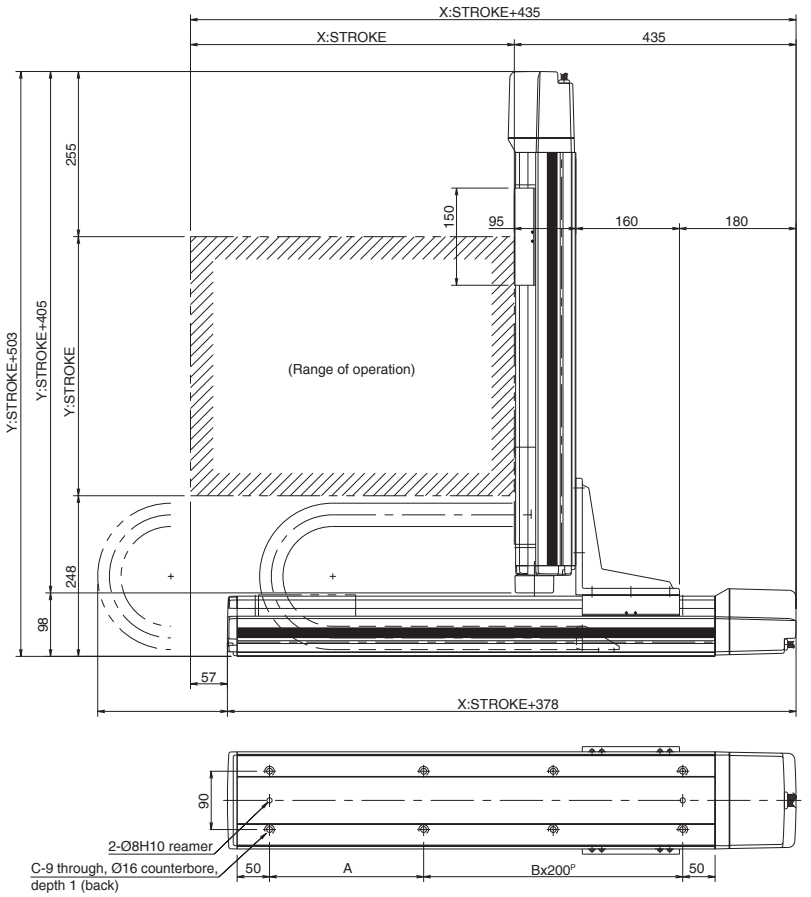

X stroke	200	300	400	500	600	700	800
A	138	238	138	238	138	238	138
B	1	1	2	2	3	3	4
C	6	6	8	8	10	10	12

ICSA2-ZHH
Cartesian Robot: X-Z 2-Axes Configuration, XZ (Z-Axis Base Mount) Type

ICSPA2-ZHH
Cartesian Robot: X-Z 2-Axes Configuration, XZ (Z-Axis Base Mount) Type
High-Precision Specification

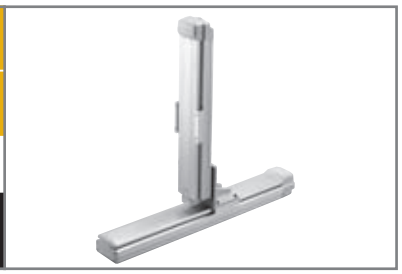

Type: XZ type
Stroke: X-axis: 1000~2500mm Z-axis: 100~500mm
Load capacity: 22kg ~ 10kg

■ Model specification items

Series	Type	Encoder type	X-axis stroke + options	Z-axis stroke + options	Applicable controller	Cable length	Cable management
ICSA2 – ZHH –	A	–	250AQLNM	–	50AQBL	–	T1	–	5L	–	CT

* Refer to page 61 for the details of model specification items.

Models/Specifications

Model	Axis configuration		Encoder type	Motor output (W)	Lead (mm)	Stroke (mm) In increments of 100mm	Speed (mm/s) (Note 1)	Load capacity (Note 2)	Positioning repeatability (mm) (Note 3)
ICSA2 [ICSPA2] -ZHH-A-✻✻✻-✻✻✻B-T1-△-CT	X-axis	ISA [ISPA] -LXM-A-400-20-✻✻✻-T1	Absolute	400	20	1000 ~ 2500	1 ~ 1000	22 ~ 10	±0.02 [±0.01]
	Z-axis	ISA [ISPA] -LZM-A-400-10-✻✻✻-T1-B			10	100 ~ 500	1 ~ 500		
ICSA2 [ICSPA2] -ZHH-I-✻✻✻-✻✻✻B-T1-△-CT	X-axis	ISA [ISPA] -LXM-I-400-20-✻✻✻-T1	Incremental		20	1000 ~ 2500	1 ~ 1000		
	Z-axis	ISA [ISPA] -LZM-I-400-10-✻✻✻-T1-B			10	100 ~ 500	1 ~ 500		

* In the above model names, ✻✻✻ indicates the stroke/applicable options (stroke is specified in centimeters), and △ the cable length.

Options

Name	Code	Page	Remarks
AQ seal	AQ	➔ P13	
Brake	B	➔ P13	Standard equipment on Z-axis
Creep sensor	C	➔ P13	
Home limit switch	L	➔ P14	
Reverse homing specification	NM	➔ P14	
Guide with ball-retaining mechanism	RT	➔ P14	

Common Specifications

Drive system (Note 4)	Ball screw, rolled C10 [equivalent to rolled C5]
Backlash (Note 5)	0.05mm or less [0.02mm or less]
Guide	Integrated with base
Base	Material: Aluminum with white alumite treatment
Cable length (Note 6)	3L: 3m, 5L: 5m, □L : Length specification
Cable management	CT: Cable track

Load Capacity by Acceleration (kg)

Acceleration (G) \ Z-axis stroke (mm)	100	200	300	400	500
0.3	22.0	18.0	16.0	12.0	10.0
0.4					
0.5					
0.6					
0.7					
0.8					
0.9					
1.0					

Maximum Speed by Stroke (mm/sec)

Axis \ Stroke (mm)	100 ~ 500	1000 ~ 1400	1500	1600	1700	1800	1900	2000	2500
X-axis	–	1000	950	830	740	650	590	540	340
Z-axis	500	–	–	–	–	–	–	–	–

Applicable Controller Specifications

Applicable controller	Maximum number of controlled axes	Compatible encoder type	Program operation	Positioner operation	Pulse-train control	Supply voltage	Page
X-SEL(-P/Q)	4(6) axes	Absolute/incremental	○	△		AC100/230V	234
S-SEL	2 axes	Absolute/incremental	○	△		AC100/230V	-
S-/E-CON	1 axis	Absolute/incremental		○ / ○	○ / -	AC100/230V	- / 226

Caution

(Note 1) The maximum speed will vary depending on the stroke. (Refer to the table of maximum speed by stroke.)
(Note 2) The load capacity assumes operation at the rated acceleration (0.3 G). The rated acceleration is the maximum specifiable acceleration for both the ICSA2 and ICSPA2.
(Notes 3, 4, 5) The figures in brackets apply to the ICSPA2.
(Note 6) The cable length measures from the X-axis connector box to the controller. The standard lengths are 3 m and 5 m, but other lengths can also be specified in meters up to 20 m (e.g., 10L = 10 m).

* Refer to page 49 for other points to note.

Self-standing Cable Specification (Cable Management Code: CT)

Dimensions

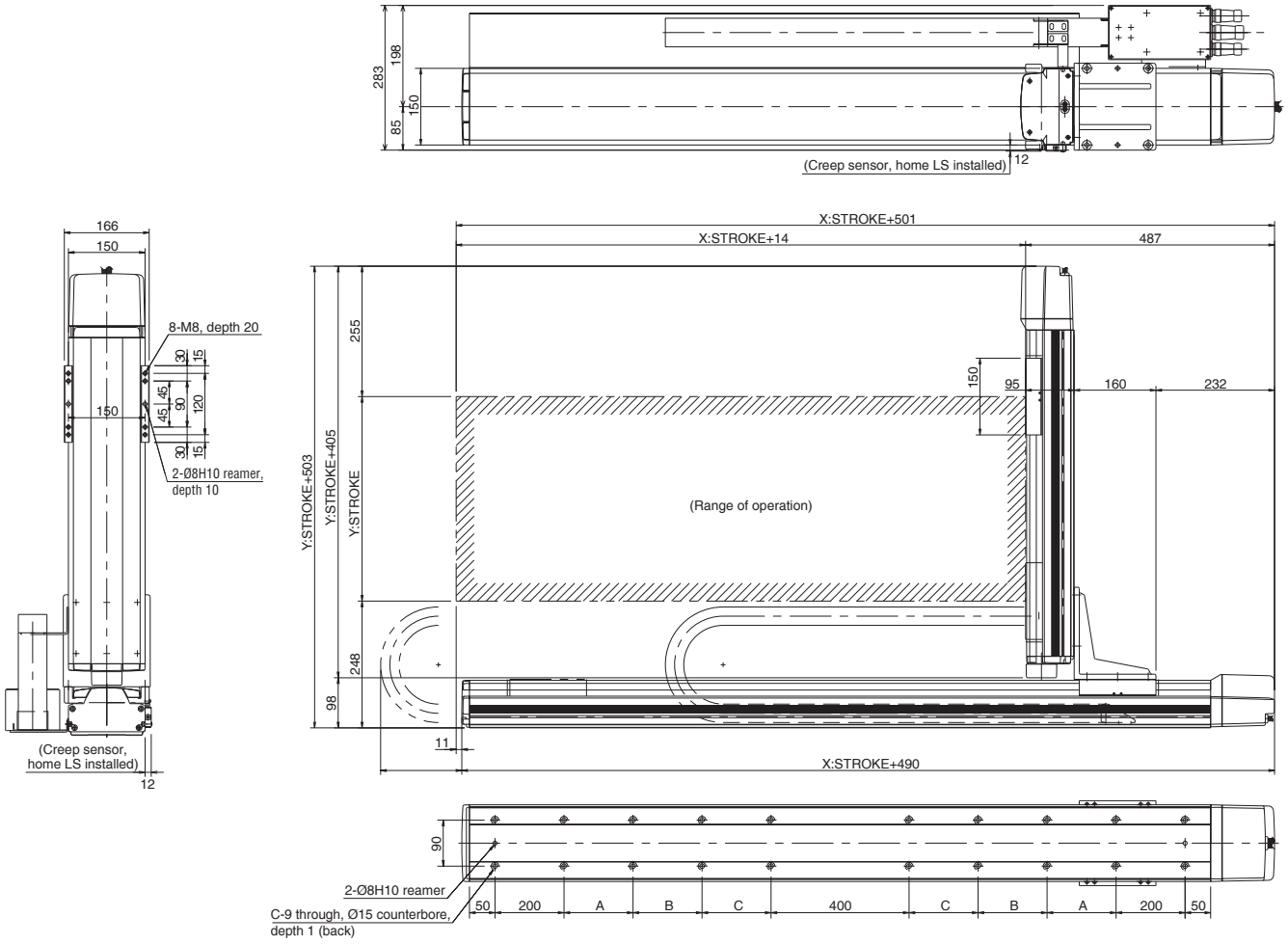

X stroke	1000	1100	1200	1300	1400	1500	1600	1700	1800	1900	2000	2100	2200	2300	2400	2500
A	225	275	325	375	425	475	525	575	200	200	200	200	200	200	200	200
B	0	0	0	0	0	0	0	0	425	475	525	575	200	200	200	200
C	0	0	0	0	0	0	0	0	0	0	0	0	425	475	525	575
D	12	12	12	12	12	12	12	12	16	16	16	16	20	20	20	20

ICSA2-YAH Cartesian Robot: Y-Z 2-Axes Configuration, YZ (Z-Axis Slider Mount) Type

ICSPA2-YAH Cartesian Robot: Y-Z 2-Axes Configuration, YZ (Z-Axis Slider Mount) Type High-Precision Specification

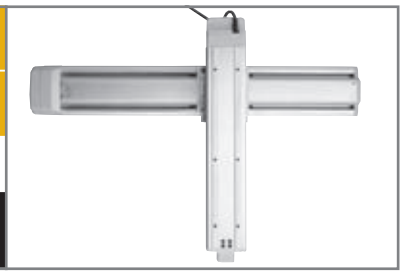

Type	Stroke	Load capacity
YZ type	Y-axis: 100~400mm Z-axis: 100~300mm	3kg ~ 1.6kg

Model specification items

Series	Type	Encoder type	Y-axis stroke + options	Z-axis stroke + options	Applicable controller	Cable length	Cable management
ICSA2 – YAH –	A	– 40AQLNM	– 30AQBL	– T1	– 5L	– SC	

* Refer to page 61 for the details of model specification items.

Models/Specifications

Model	Axis configuration		Encoder type	Motor output (W)	Lead (mm)	Stroke (mm) In increments of 100mm	Speed (mm/s)	Load capacity (Note 1)	Positioning repeatability (mm) (Note 2)
ICSA2 [ICSPA2] -YAH-A-✻✻✻-✻✻✻B-T1-△-SC	Y-axis	ISA [ISPA] -SYM-A-60-16-✻✻✻-T1	Absolute	60	16	100 ~ 400	1 ~ 800	3 ~ 1.6	±0.02 [±0.01]
	Z-axis	ISA [ISPA] -SZM-A-60-8-✻✻✻-T1-B			8	100 ~ 300	1 ~ 400		
ICSA2 [ICSPA2] -YAH-I-✻✻✻-✻✻✻B-T1-△-SC	Y-axis	ISA [ISPA] -SYM-A-60-16-✻✻✻-T1	Incremental		16	100 ~ 400	1 ~ 800		
	Z-axis	ISA [ISPA] -SZM-A-60-8-✻✻✻-T1-B			8	100 ~ 300	1 ~ 400		

* In the above model names, ✻✻✻ indicates the stroke/applicable options (stroke is specified in centimeters), and △ the cable length.

Options

Name	Code	Page	Remarks
AQ seal	AQ	➔ P13	
Brake	B	➔ P13	Standard equipment on Z-axis
Creep sensor	C	➔ P13	
Home limit switch	L	➔ P14	
Reverse homing specification	NM	➔ P14	
Guide with ball-retaining mechanism	RT	➔ P14	

Common Specifications

Drive system (Note 3)	Ball screw, rolled C10 [equivalent to rolled C5]
Backlash (Note 4)	0.05mm or less [0.02mm or less]
Guide	Integrated with base
Base	Material: Aluminum with white alumite treatment
Cable length (Note 5)	3L: 3m, 5L: 5m, □L : Length specification
Cable management	SC: Self-standing cable

Load Capacity by Acceleration (kg)

Acceleration (G) \ Z-axis stroke (mm)	100	200	300
0.3	3.0	2.3	1.6
0.4	2.5	1.8	1.1
0.5	1.0	0.3	
0.6			
0.7			
0.8			
0.9			
1.0			

Maximum Speed by Stroke (mm/sec)

Axis \ Stroke (mm)	100 ~ 300	400
Y-axis	800	
Z-axis	400	–

Applicable Controller Specifications

Applicable controller	Maximum number of controlled axes	Compatible encoder type	Program operation	Positioner operation	Pulse-train control	Supply voltage	Page
X-SEL(-P/Q)	4(6) axes	Absolute/incremental	○	△		AC100/230V	234
S-SEL	2 axes	Absolute/incremental	○	△		AC100/230V	-
S-/E-CON	1 axis	Absolute/incremental		○ / ○	○ / -	AC100/230V	- / 226

Caution

(Note 1) The load capacity assumes operation at the rated acceleration (0.3 G). The actuator can be operated at accelerations beyond the rated acceleration, but the load capacity will decrease (refer to the table of load capacity by acceleration).
(Notes 2, 3, 4) The figures in brackets apply to the ICSPA2.
(Note 5) The cable length measures from the X-axis connector box to the controller. The standard lengths are 3 m and 5 m, but other lengths can also be specified in meters up to 20 m (e.g., 10L = 10 m).

* Refer to page 59 for other points to note.

Self-standing Cable Specification (Cable Management Code: SC)

Dimensions

* Note that changing the home direction will require the actuator to be returned to IAI for adjustment.

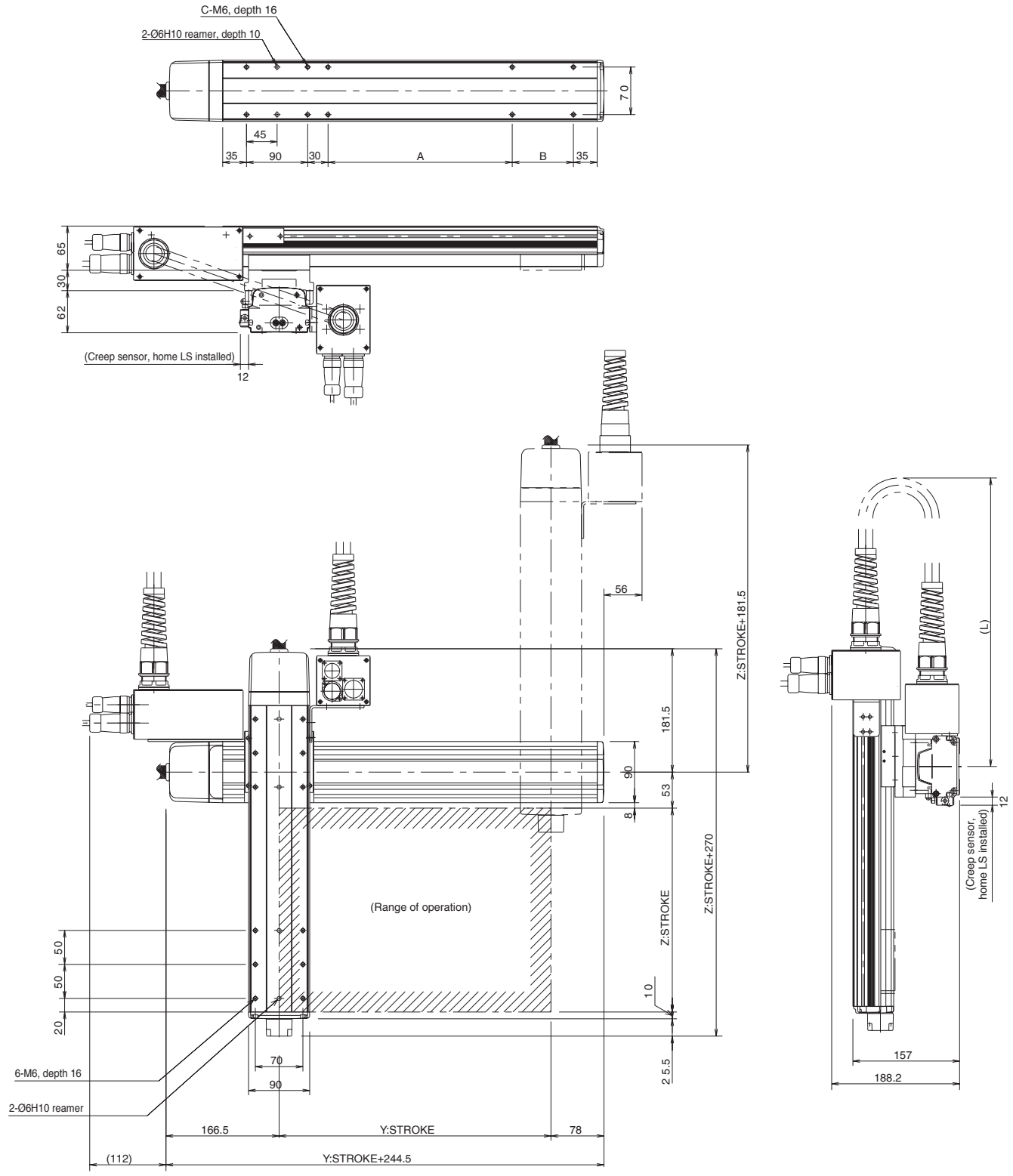

Dimension L				
Zst \ Yst	100	200	300	400
100	450	500	550	600
200	550	600	650	700
300	650	700	750	800

Y stroke	100	200	300	400
A	61	71	171	271
B	Ð	90	90	90
C	8	10	10	10

ICSA2-YAM Cartesian Robot: Y-Z 2-Axes Configuration, YZ (Z-Axis Slider Mount) Type

ICSPA2-YAM Cartesian Robot: Y-Z 2-Axes Configuration, YZ (Z-Axis Slider Mount) Type High-Precision Specification

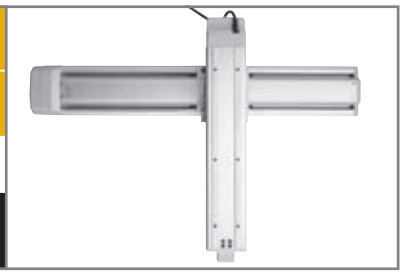

Type	Stroke	Load capacity
YZ type	Y-axis: 100~400mm Z-axis: 100~300mm	11kg ~ 9.6kg

Model specification items

Series	Type	Encoder type	Y-axis stroke + options	Z-axis stroke + options	Applicable controller	Cable length	Cable management
ICSA2 – YAM –	A	– 40AQLNM	– 30AQBL	– T1	– 5L	– SC	

* Refer to page 61 for the details of model specification items.

Models/Specifications

Model	Axis configuration		Encoder type	Motor output (W)	Lead (mm)	Stroke (mm) In increments of 100mm	Speed (mm/s)	Load capacity (Note 1)	Positioning repeatability (mm) (Note 2)
ICSA2 [ICSPA2] -YAM-A-✻✻✻-✻✻✻B-T1-△-SC	Y-axis	ISA [ISPA] -SYM-A-60-8-✻✻✻-T1	Absolute	60	8	100 ~ 400	1 ~ 400	11 ~ 9.6	±0.02 [±0.01]
	Z-axis	ISA [ISPA] -SZM-A-60-4-✻✻✻-T1-B			4	100 ~ 300	1 ~ 200		
ICSA2 [ICSPA2] -YAM-I-✻✻✻-✻✻✻B-T1-△-SC	Y-axis	ISA [ISPA] -SYM-I-60-8-✻✻✻-T1	Incremental		8	100 ~ 400	1 ~ 400		
	Z-axis	ISA [ISPA] -SZM-I-60-4-✻✻✻-T1-B			4	100 ~ 300	1 ~ 200		

* In the above model names, ✻✻✻ indicates the stroke/applicable options (stroke is specified in centimeters), and △ the cable length.

Options

Name	Code	Page	Remarks
AQ seal	AQ	➔ P13	
Brake	B	➔ P13	Standard equipment on Z-axis
Creep sensor	C	➔ P13	
Home limit switch	L	➔ P14	
Reverse homing specification	NM	➔ P14	
Guide with ball-retaining mechanism	RT	➔ P14	

Common Specifications

Drive system (Note 3)	Ball screw, rolled C10 [equivalent to rolled C5]
Backlash (Note 4)	0.05mm or less [0.02mm or less]
Guide	Integrated with base
Base	Material: Aluminum with white alumite treatment
Cable length (Note 5)	3L: 3m, 5L: 5m, □L : Length specification
Cable management	SC: Self-standing cable

Load Capacity by Acceleration (kg)

Acceleration (G) \ Z-axis stroke (mm)	100	200	300
0.3	11.0	10.3	9.6
0.4	11.0	10.3	9.6
0.5	9.0	8.3	7.6
0.6	6.0	5.3	4.6
0.7			
0.8			
0.9			
1.0			

* Assuming operation of the Z axis at its rated acceleration of 0.15 G, the load capacity varies according to the changes in acceleration of the X axis.

Maximum Speed by Stroke (mm/sec)

Axis \ Stroke (mm)	100 ~ 300	400
Y-axis	400	
Z-axis	200	–

Applicable Controller Specifications

Applicable controller	Maximum number of controlled axes	Compatible encoder type	Program operation	Positioner operation	Pulse-train control	Supply voltage	Page
X-SEL(-P/Q)	4(6) axes	Absolute/incremental	○	△		AC100/230V	234
S-SEL	2 axes	Absolute/incremental	○	△		AC100/230V	-
S-/E-CON	1 axis	Absolute/incremental		○ / ○	○ / -	AC100/230V	- / 226

Caution

(Note 1) The load capacity assumes operation at the rated acceleration (0.3 G for the Y-axis, 0.15 G for the Z-axis). The actuator can be operated at accelerations beyond the rated acceleration, but the load capacity will decrease (refer to the table of load capacity by acceleration).
(Notes 2, 3, 4) The figures in brackets apply to the ICSPA2.
(Note 5) The cable length measures from the X-axis connector box to the controller. The standard lengths are 3 m and 5 m, but other lengths can also be specified in meters up to 20 m (e.g., 10L = 10 m).

* Refer to page 59 for other points to note.

Self-standing Cable Specification (Cable Management Code: SC)

Dimensions

* Note that changing the home direction will require the actuator to be returned to IAI for adjustment.

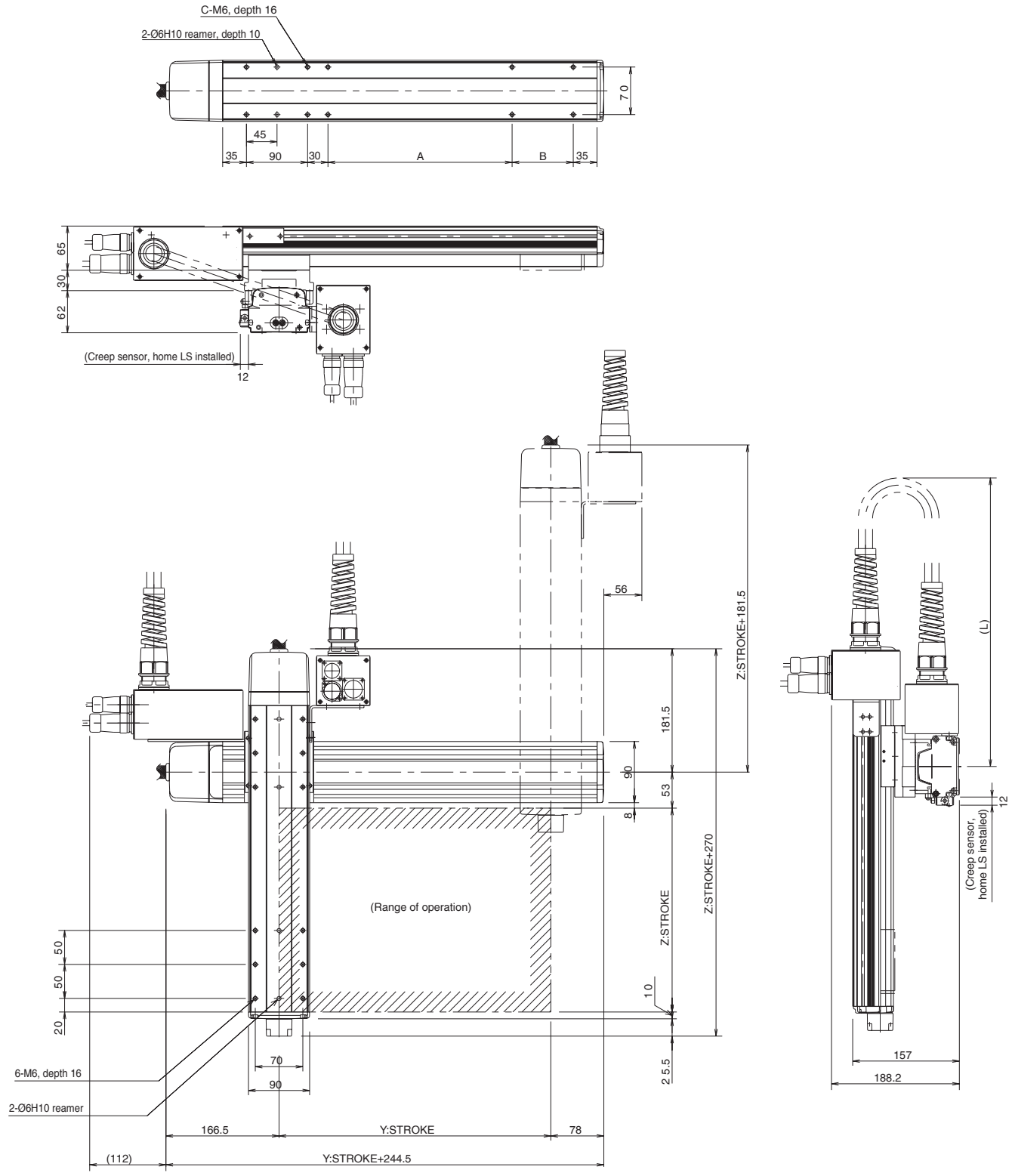

Dimension L				
Zst \ Yst	100	200	300	400
100	450	500	550	600
200	550	600	650	700
300	650	700	750	800

Y stroke	100	200	300	400
A	61	71	171	271
B	Ð	90	90	90
C	8	10	10	10

ICSA2-YCH
Cartesian Robot: Y-Z 2-Axes Configuration, YZ (Z-Axis Slider Mount) Type

ICSPA2-YCH
Cartesian Robot: Y-Z 2-Axes Configuration, YZ (Z-Axis Slider Mount) Type
High-Precision Specification

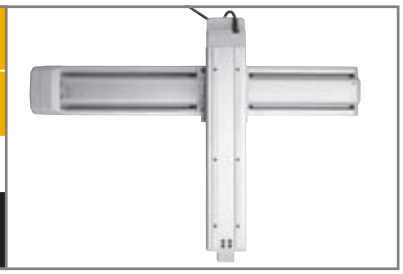

Type	Stroke	Load capacity
YZ type	Y-axis: 200~700mm Z-axis: 100~400mm	11.9kg ~ 8.9kg

■ Model specification items

Series	Type	Encoder type	Y-axis stroke + options	Z-axis stroke + options	Applicable controller	Cable length	Cable management
ICSA2 – YCH –	A	– 70AQLNM	– 40AQBL	– T1	– 5L	– SC	

* Refer to page 61 for the details of model specification items.

Models/Specifications

Model	Axis configuration		Encoder type	Motor output (W)	Lead (mm)	Stroke (mm) In increments of 100mm	Speed (mm/s)	Load capacity (Note 1)	Positioning repeatability (mm) (Note 2)
ICSA2 [ICSPA2] -YCH-A-＊＊＊-＊＊＊B-T1-△-SC	Y-axis	ISA [ISPA] -MYM-A-200-20-＊＊＊-T1	Absolute	200	20	200 ~ 700	1 ~ 1000	11.9 ~ 8.9	±0.02 [±0.01]
	Z-axis	ISA [ISPA] -MZM-A-200-20-＊＊＊-T1-B			10	100 ~ 400	1 ~ 500		
ICSA2 [ICSPA2] -YCH-I-＊＊＊-＊＊＊B-T1-△-SC	Y-axis	ISA [ISPA] -MYM-I-200-20-＊＊＊-T1	Incremental		20	200 ~ 700	1 ~ 1000		
	Z-axis	ISA [ISPA] -MZM-I-200-20-＊＊＊-T1-B			10	100 ~ 400	1 ~ 500		

* In the above model names, ＊＊＊ indicates the stroke/applicable options (stroke is specified in centimeters), and △ the cable length.

Options

Name	Code	Page	Remarks
AQ seal	AQ	➔ P13	
Brake	B	➔ P13	Standard equipment on Z-axis
Creep sensor	C	➔ P13	
Home limit switch	L	➔ P14	
Reverse homing specification	NM	➔ P14	
Guide with ball-retaining mechanism	RT	➔ P14	

Common Specifications

Drive system (Note 3)	Ball screw, rolled C10 [equivalent to rolled C5]
Backlash (Note 4)	0.05mm or less [0.02mm or less]
Guide	Integrated with base
Base	Material: Aluminum with white alumite treatment
Cable length (Note 5)	3L: 3m, 5L: 5m, □L : Length specification
Cable management	SC: Self-standing cable

Load Capacity by Acceleration (kg)

Acceleration (G) \ Z-axis stroke (mm)	100	200	300	400
0.3	11.9	10.9	9.9	8.9
0.4	9.2	8.2	7.2	6.2
0.5	7.9	6.9	5.9	4.9
0.6				
0.7				
0.8				
0.9				
1.0				

Maximum Speed by Stroke (mm/sec)

Axis \ Stroke (mm)	100	200 ~ 400	500 ~ 700
Y-axis	–	1000	
Z-axis	500		–

Applicable Controller Specifications

Applicable controller	Maximum number of controlled axes	Compatible encoder type	Program operation	Positioner operation	Pulse-train control	Supply voltage	Page
X-SEL(-P/Q)	4(6) axes	Absolute/incremental	○	△		AC100/230V	234
S-SEL	2 axes	Absolute/incremental	○	△		AC100/230V	-
S-/E-CON	1 axis	Absolute/incremental		○ / ○	○ / -	AC100/230V	- / 226

Caution

(Note 1) The load capacity assumes operation at the rated acceleration (0.3 G). The actuator can be operated at accelerations beyond the rated acceleration, but the load capacity will decrease (refer to the table of load capacity by acceleration).
(Notes 2, 3, 4) The figures in brackets apply to the ICSPA2.
(Note 5) The cable length measures from the X-axis connector box to the controller. The standard lengths are 3 m and 5 m, but other lengths can also be specified in meters up to 20 m (e.g., 10L = 10 m).

* Refer to page 59 for other points to note.

Self-standing Cable Specification (Cable Management Code: SC)

Dimensions

* Note that changing the home direction will require the actuator to be returned to IAI for adjustment.

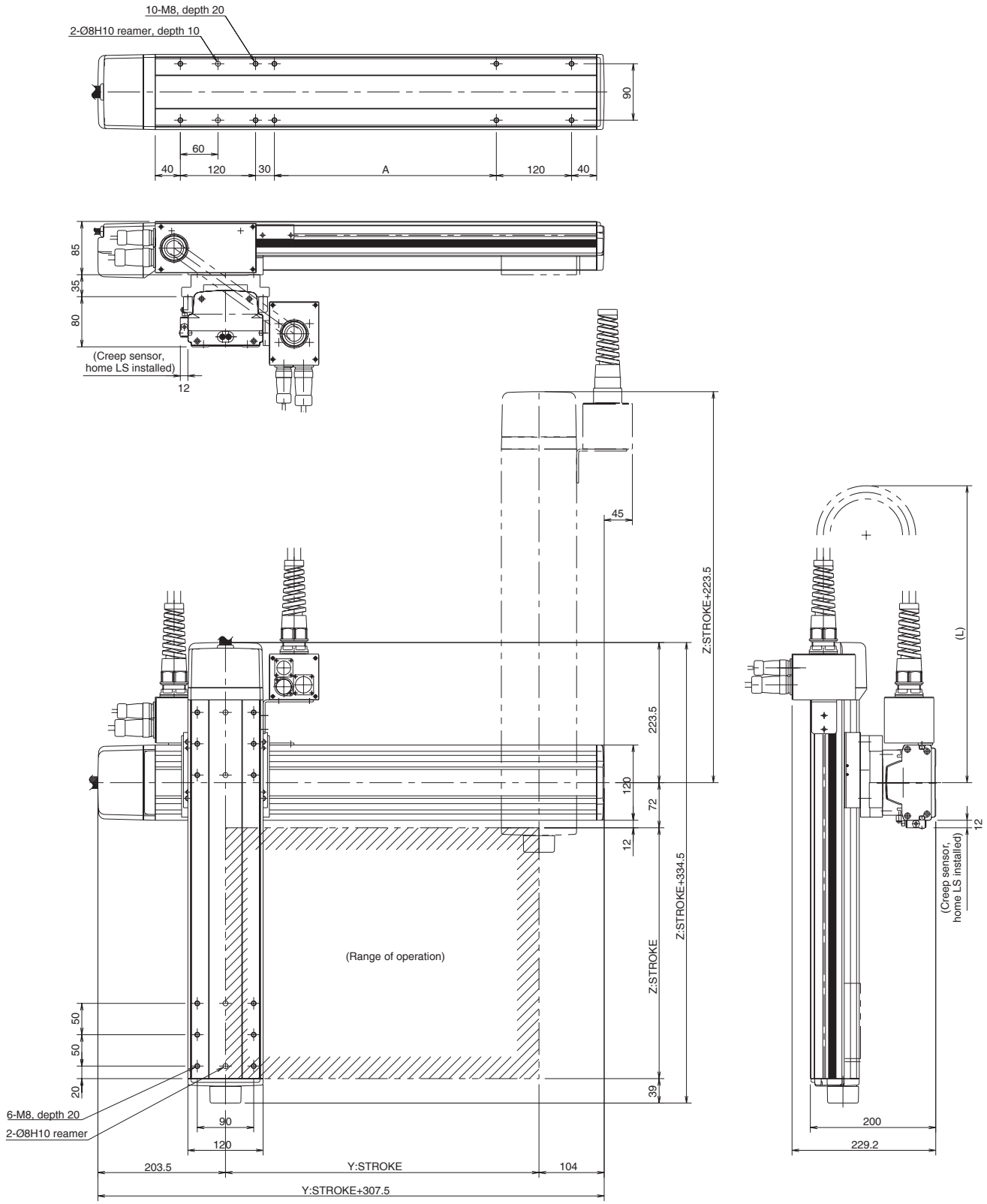

Dimension L						
Zst \ Yst	200	300	400	500	600	700
100	500	550	600	650	700	750
200	600	650	700	750	800	850
300	700	750	800	850	900	950
400	800	850	900	950	1000	1050

Y stroke	200	300	400	500	600	700
A	404	504	604	704	804	904

ICSA2-YCM Cartesian Robot: Y-Z 2-Axes Configuration, YZ (Z-Axis Slider Mount) Type

ICSPA2-YCM Cartesian Robot: Y-Z 2-Axes Configuration, YZ (Z-Axis Slider Mount) Type High-Precision Specification

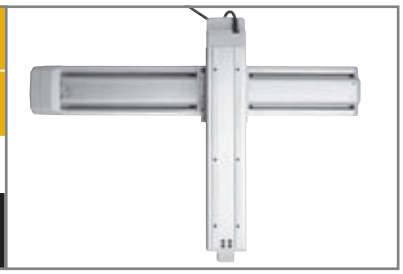

Type	Stroke	Load capacity
YZ type	Y-axis: 200~700mm Z-axis: 100~400mm	13.1kg ~ 10.1kg

■ Model specification items

Series	Type	Encoder type	Y-axis stroke + options	Z-axis stroke + options	Applicable controller	Cable length	Cable management
ICSA2 – YCM –	A	– 70AQLNM	– 40AQBL	– T1	– 5L	– SC	

* Refer to page 61 for the details of model specification items.

Models/Specifications

Model	Axis configuration		Encoder type	Motor output (W)	Lead (mm)	Stroke (mm) In increments of 100mm	Speed (mm/s) (Note 1)	Load capacity (Note 2)	Positioning repeatability (mm) (Note 3)
ICSA2 [ICSPA2] -YCM-A-✻✻✻-✻✻✻B-T1-△-SC	Y-axis	ISA [ISPA] -MYM-A-100-10-✻✻✻-T1	Absolute	100	10	200 ~ 700	1 ~ 500	13.1 ~ 10.1	±0.02 [±0.01]
	Z-axis	ISA [ISPA] -MZM-A-100-5-✻✻✻-T1-B			5	100 ~ 400	1 ~ 250		
ICSA2 [ICSPA2] -YCM-I-✻✻✻-✻✻✻B-T1-△-SC	Y-axis	ISA [ISPA] -MYM-I-100-10-✻✻✻-T1	Incremental		10	200 ~ 700	1 ~ 500		
	Z-axis	ISA [ISPA] -MZM-I-100-5-✻✻✻-T1-B			5	100 ~ 400	1 ~ 250		

* In the above model names, ✻✻✻ indicates the stroke/applicable options (stroke is specified in centimeters), and △ the cable length.

Options

Name	Code	Page	Remarks
AQ seal	AQ	➔ P13	
Brake	B	➔ P13	Standard equipment on Z-axis
Creep sensor	C	➔ P13	
Home limit switch	L	➔ P14	
Reverse homing specification	NM	➔ P14	
Guide with ball-retaining mechanism	RT	➔ P14	

Common Specifications

Drive system (Note 4)	Ball screw, rolled C10 [equivalent to rolled C5]
Backlash (Note 5)	0.05mm or less [0.02mm or less]
Guide	Integrated with base
Base	Material: Aluminum with white alumite treatment
Cable length (Note 6)	3L: 3m, 5L: 5m, □L : Length specification
Cable management	SC: Self-standing cable

Load Capacity by Acceleration (kg)

Acceleration (G) \ Z-axis stroke (mm)	100	200	300	400
0.3	13.1	12.1	11.1	10.1
0.4	13.1	12.1	11.1	10.1
0.5	13.1	12.1	11.1	10.1
0.6	10.1	9.1	8.1	7.1
0.7				
0.8				
0.9				
1.0				

* Assuming operation of the Z axis at its rated acceleration of 0.15 G, the load capacity varies according to the changes in acceleration of the X axis.

Maximum Speed by Stroke (mm/sec)

Axis \ Stroke (mm)	100	200 ~ 400	500 ~ 600	700
Y-axis	–	500		480
Z-axis	250		–	

Applicable Controller Specifications

Applicable controller	Maximum number of controlled axes	Compatible encoder type	Program operation	Positioner operation	Pulse-train control	Supply voltage	Page
X-SEL(-P/Q)	4(6) axes	Absolute/incremental	○	△		AC100/230V	234
S-SEL	2 axes	Absolute/incremental	○	△		AC100/230V	-
S-/E-CON	1 axis	Absolute/incremental		○ / ○	○ / -	AC100/230V	- / 226

Caution

(Note 1) The maximum speed will vary depending on the stroke. (Refer to the table of maximum speed by stroke.)
(Note 2) The load capacity assumes operation at the rated acceleration (0.3 G for the Y-axis, 0.15 G for the Z-axis). The actuator can be operated at accelerations beyond the rated acceleration, but the load capacity will decrease (refer to the table of load capacity by acceleration).
(Notes 3, 4, 5) The figures in brackets apply to the ICSPA2.
(Note 6) The cable length measures from the Y-axis connector box to the controller. The standard lengths are 3 m and 5 m, but other lengths can also be specified in meters up to 20 m (e.g., 10L = 10 m).

* Refer to page 59 for other points to note.

Self-standing Cable Specification (Cable Management Code: SC)

Dimensions

* Note that changing the home direction will require the actuator to be returned to IAI for adjustment.

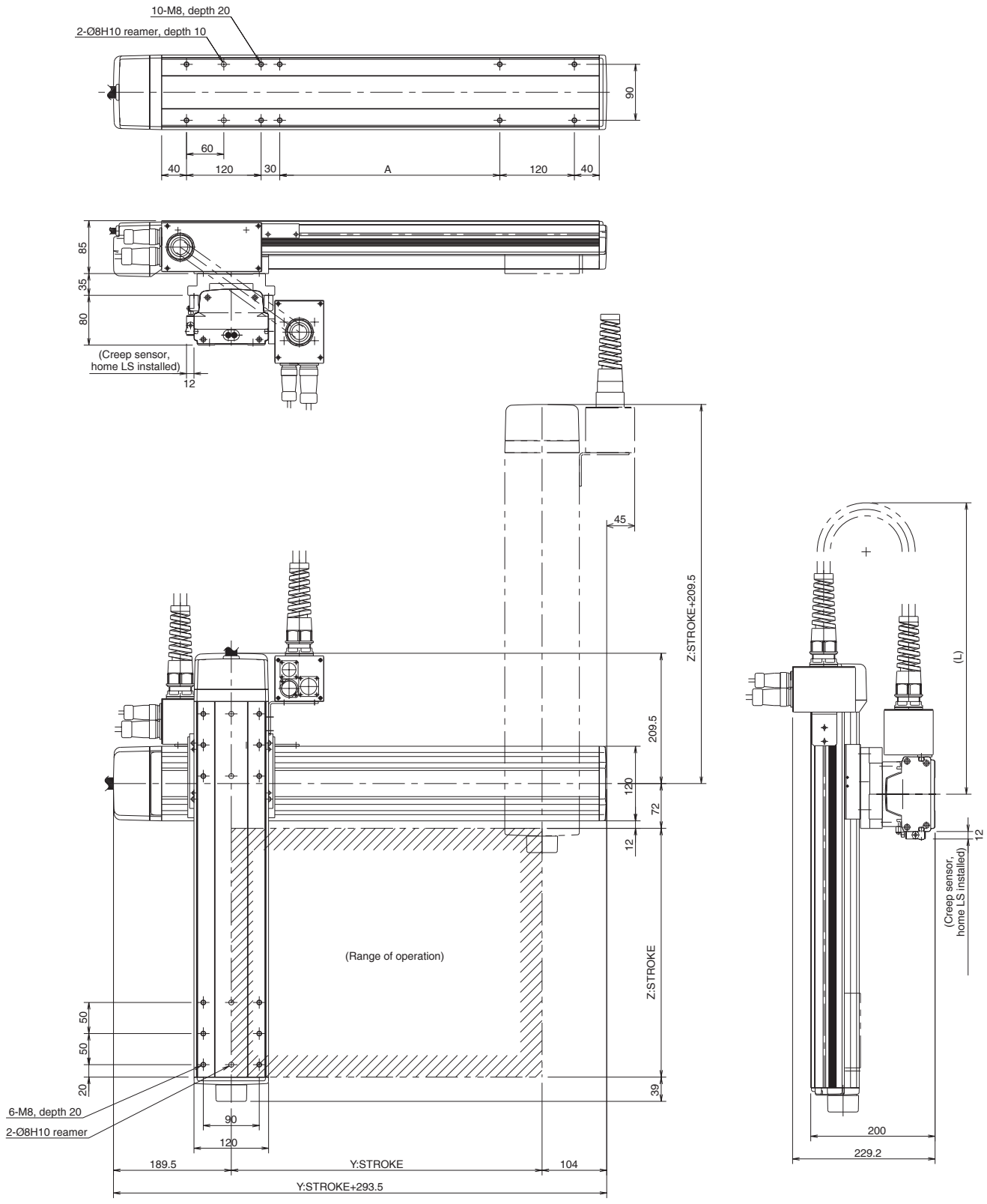

Dimension L						
Zst \ Yst	200	300	400	500	600	700
100	500	550	600	650	700	750
200	600	650	700	750	800	850
300	700	750	800	850	900	950
400	800	850	900	950	1000	1050

Y stroke	200	300	400	500	600	700
A	404	504	604	704	804	904

ICSA2-YGH
Cartesian Robot: Y-Z 2-Axes Configuration, YZ (Z-Axis Slider Mount) Type

ICSPA2-YGH
Cartesian Robot: Y-Z 2-Axes Configuration, YZ (Z-Axis Slider Mount) Type
High-Precision Specification

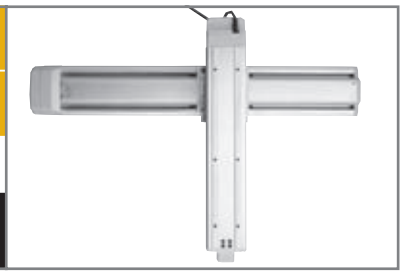

Type	Stroke	Load capacity
YZ type	Y-axis: 200~700mm Z-axis: 100~500mm	27kg ~ 20.7kg

■ Model specification items

Series	Type	Encoder type	Y-axis stroke + options	Z-axis stroke + options	Applicable controller	Cable length	Cable management
ICSA2	– YCH	– A	– 70AQLNM	– 50AQBL	– T1	– 5L	– SC

* Refer to page 61 for the details of model specification items.

Models/Specifications

Model	Axis configuration		Encoder type	Motor output (W)	Lead (mm)	Stroke (mm) In increments of 100mm	Speed (mm/s)	Load capacity (Note 1)	Positioning repeatability (mm) (Note 2)
ICSA2 [ICSPA2] -YGH-A-＊＊＊-＊＊＊B-T1-△-SC	Y-axis	ISA [ISPA] -LYM-A-400-20-＊＊＊-T1	Absolute	400	20	200 ~ 700	1 ~ 1000	27 ~ 20.7	±0.02 [±0.01]
	Z-axis	ISA [ISPA] -LZM-A-400-10-＊＊＊-T1-B			10	100 ~ 500	1 ~ 500		
ICSA2 [ICSPA2] -YGH-I-＊＊＊-＊＊＊B-T1-△-SC	Y-axis	ISA [ISPA] -LYM-A-400-20-＊＊＊-T1	Incremental		20	200 ~ 700	1 ~ 1000		
	Z-axis	ISA [ISPA] -LZM-A-400-10-＊＊＊-T1-B			10	100 ~ 500	1 ~ 500		

* In the above model names, ＊＊＊ indicates the stroke/applicable options (stroke is specified in centimeters), and △ the cable length.

Options

Name	Code	Page	Remarks
AQ seal	AQ	➔ P13	
Brake	B	➔ P13	Standard equipment on Z-axis
Creep sensor	C	➔ P13	
Home limit switch	L	➔ P14	
Reverse homing specification	NM	➔ P14	
Guide with ball-retaining mechanism	RT	➔ P14	

Common Specifications

Drive system (Note 3)	Ball screw, rolled C10 [equivalent to rolled C5]
Backlash (Note 4)	0.05mm or less [0.02mm or less]
Guide	Integrated with base
Base	Material: Aluminum with white alumite treatment
Cable length (Note 5)	3L: 3m, 5L: 5m, □L : Length specification
Cable management	SC: Self-standing cable

Load Capacity by Acceleration (kg)

Acceleration (G) \ Z-axis stroke (mm)	100	200	300	400	500
0.3	27.0	25.5	23.9	22.3	20.7
0.4	20.1	18.6	17.0	15.4	13.8
0.5	15.6	14.1	12.5	10.9	9.3
0.6					
0.7					
0.8					
0.9					
1.0					

Maximum Speed by Stroke (mm/sec)

Axis \ Stroke (mm)	100	200 ~ 500	600 ~ 700
Y-axis	–	1000	
Z-axis	500		–

Applicable Controller Specifications

Applicable controller	Maximum number of controlled axes	Compatible encoder type	Program operation	Positioner operation	Pulse-train control	Supply voltage	Page
X-SEL(-P/Q)	4(6) axes	Absolute/incremental	○	△		AC100/230V	234
S-SEL	2 axes	Absolute/incremental	○	△		AC100/230V	-
S-/E-CON	1 axis	Absolute/incremental		○ / ○	○ / -	AC100/230V	- / 226

Caution

(Note 1) The load capacity assumes operation at the rated acceleration (0.3 G). The actuator can be operated at accelerations beyond the rated acceleration, but the load capacity will decrease (refer to the table of load capacity by acceleration).
(Notes 2, 3, 4) The figures in brackets apply to the ICSPA2.
(Note 5) The cable length measures from the X-axis connector box to the controller. The standard lengths are 3 m and 5 m, but other lengths can also be specified in meters up to 20 m (e.g., 10L = 10 m).

* Refer to page 59 for other points to note.

Self-standing Cable Specification (Cable Management Code: SC)

Dimensions

* Note that changing the home direction will require the actuator to be returned to IAI for adjustment.

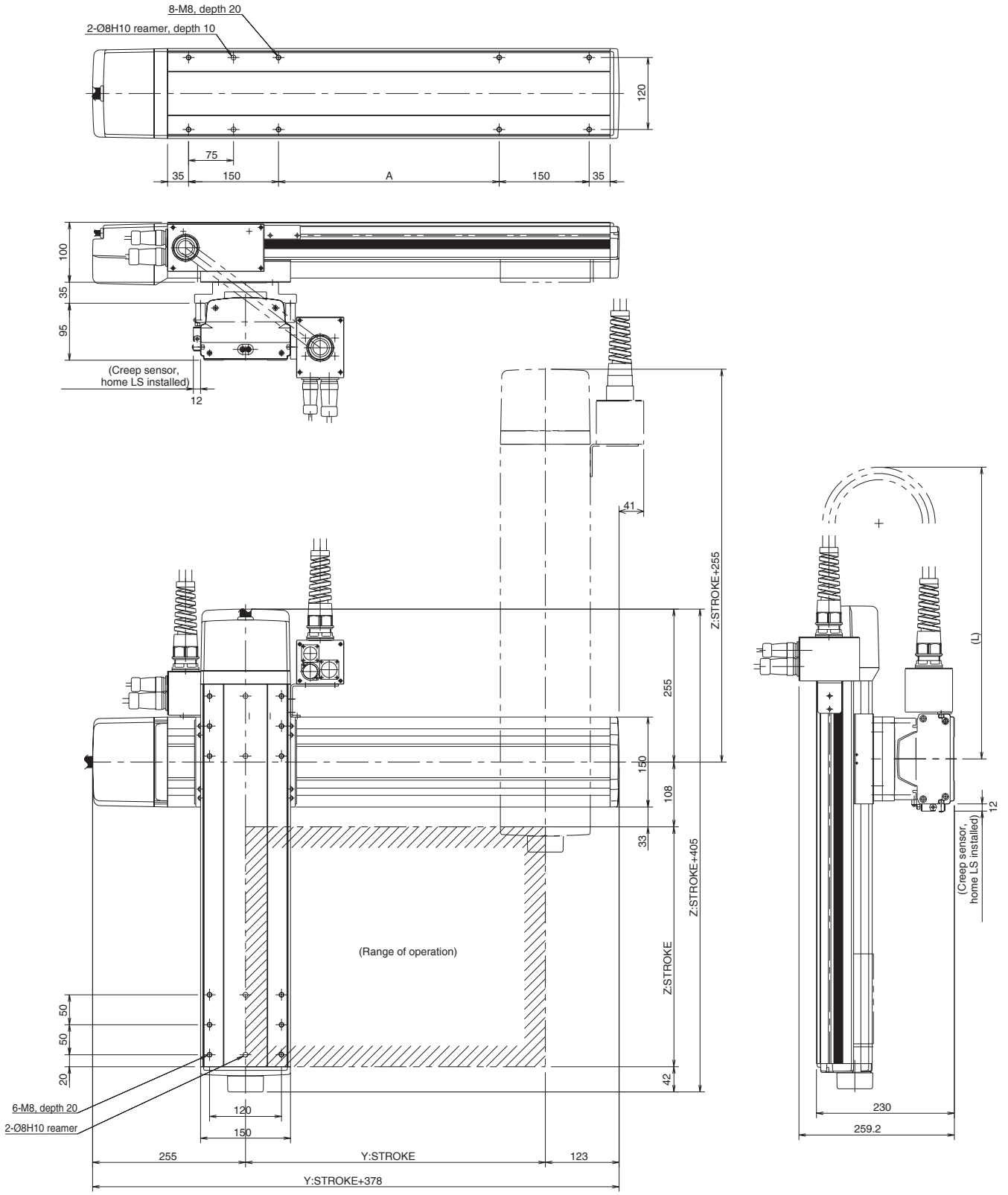

Dimension L						
Zst \ Yst	200	300	400	500	600	700
100	500	550	600	650	700	750
200	600	650	700	750	800	850
300	700	750	800	850	900	950
400	800	850	900	950	1000	1050
500	900	950	1000	1050	1100	1150

Y stroke	200	300	400	500	600	700
A	438	538	638	738	838	938

ICSA2-G1JH Cartesian Robot: X-Y 2-Axes Configuration, XYG (Y-Axis Gantry) Type

ICSPA2-G1JH Cartesian Robot: X-Y 2-Axes Configuration, XYG (Y-Axis Gantry) Type High-Precision Specification

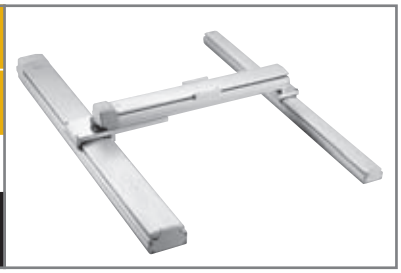

Type: XYG type | Stroke: X-axis: 1000~2500mm Y-axis: 500~700mm | Load capacity: 40kg

■ Model specification items

Series	Type	Encoder type	X-axis stroke + options	Y-axis stroke + options	Applicable controller	Cable length	Cable management
ICSA2–	G1JH –	A	– 250AQLNM	– 70AQBL	– T1	– 5L	– CT

* Refer to page 61 for the details of model specification items.

Models/Specifications

Model	Axis configuration		Encoder type	Motor output (W)	Lead (mm)	Stroke (mm) In increments of 100mm	Speed (mm/s) (Note 1)	Load capacity (Note 2)	Positioning repeatability (mm) (Note 3)
ICSA2 [ICSPA2] -G1JH-A-＊＊＊-＊＊＊-T1-△-CT	X-axis	ISA [ISPA] -LXUWX-A-400-20-＊＊＊-T1	Absolute	400	20	1000 ~ 2500	1 ~ 1000	40	±0.02 [±0.01]
	Y-axis	ISA [ISPA] -MXM-A-200-20-＊＊＊-T1		200		500 ~ 700			
ICSA2 [ICSPA2] -G1JH-I-＊＊＊-＊＊＊-T1-△-CT	X-axis	ISA [ISPA] -LXUWX-I-400-20-＊＊＊-T1	Incremental	400		1000 ~ 2500			
	Y-axis	ISA [ISPA] -MXM-I-200-20-＊＊＊-T1		200		500 ~ 700			

* In the above model names, ＊＊＊ indicates the stroke/applicable options (stroke is specified in centimeters), and △ the cable length.

Options

Name	Code	Page	Remarks
AQ seal	AQ	➔ P13	
Brake	B	➔ P13	
Creep sensor	C	➔ P13	
Home limit switch	L	➔ P14	
Reverse homing specification	NM	➔ P14	
Guide with ball-retaining mechanism	RT	➔ P14	

Common Specifications

Drive system (Note 4)	Ball screw, rolled C10 [equivalent to rolled C5]
Backlash (Note 5)	0.05mm or less [0.02mm or less]
Guide	Integrated with base
Base	Material: Aluminum with white alumite treatment
Cable length (Note 6)	3L: 3m, 5L: 5m, □L : Length specification
Cable management	CT: Cable track

Load Capacity by Acceleration (kg)

Acceleration (G) \ Y-axis stroke (mm)	500	600	700
0.3	40.0	40.0	40.0
0.4			
0.5			
0.6			
0.7			
0.8			
0.9			
1.0			

Maximum Speed by Stroke (mm/sec)

Axis \ Stroke (mm)	500 ~ 700	1000 ~ 1400	1500	1600	1700	1800	1900	2000	2500
X-axis	–	1000	950	830	740	650	590	540	300
Y-axis	1000	–	–	–	–	–	–	–	–

Applicable Controller Specifications

Applicable controller	Maximum number of controlled axes	Compatible encoder type	Program operation	Positioner operation	Pulse-train control	Supply voltage	Page
X-SEL(-P/Q)	4(6) axes	Absolute/incremental	○	△		AC100/230V	234
S-SEL	2 axes	Absolute/incremental	○	△		AC100/230V	-
S-/E-CON	1 axis	Absolute/incremental		○ / ○	○ / -	AC100/230V	- / 226

Caution

(Note 1) The maximum speed will vary depending on the stroke. (Refer to the table of maximum speed by stroke.)
(Note 2) The load capacity assumes operation at the rated acceleration (0.3 G). The rated acceleration is the maximum specifiable acceleration for both the ICSA2 and ICSPA2.
(Notes 3, 4, 5) The figures in brackets apply to the ICSPA2.
(Note 6) The cable length measures from the X-axis connector box to the controller. The standard lengths are 3 m and 5 m, but other lengths can also be specified in meters up to 20 m (e.g., 10L = 10 m).

* Refer to page 59 for other points to note.

Cable Track Specification (Cable Management Code: CT)

Dimensions

*Note that changing the home direction will require the actuator to be returned to IAI for adjustment.

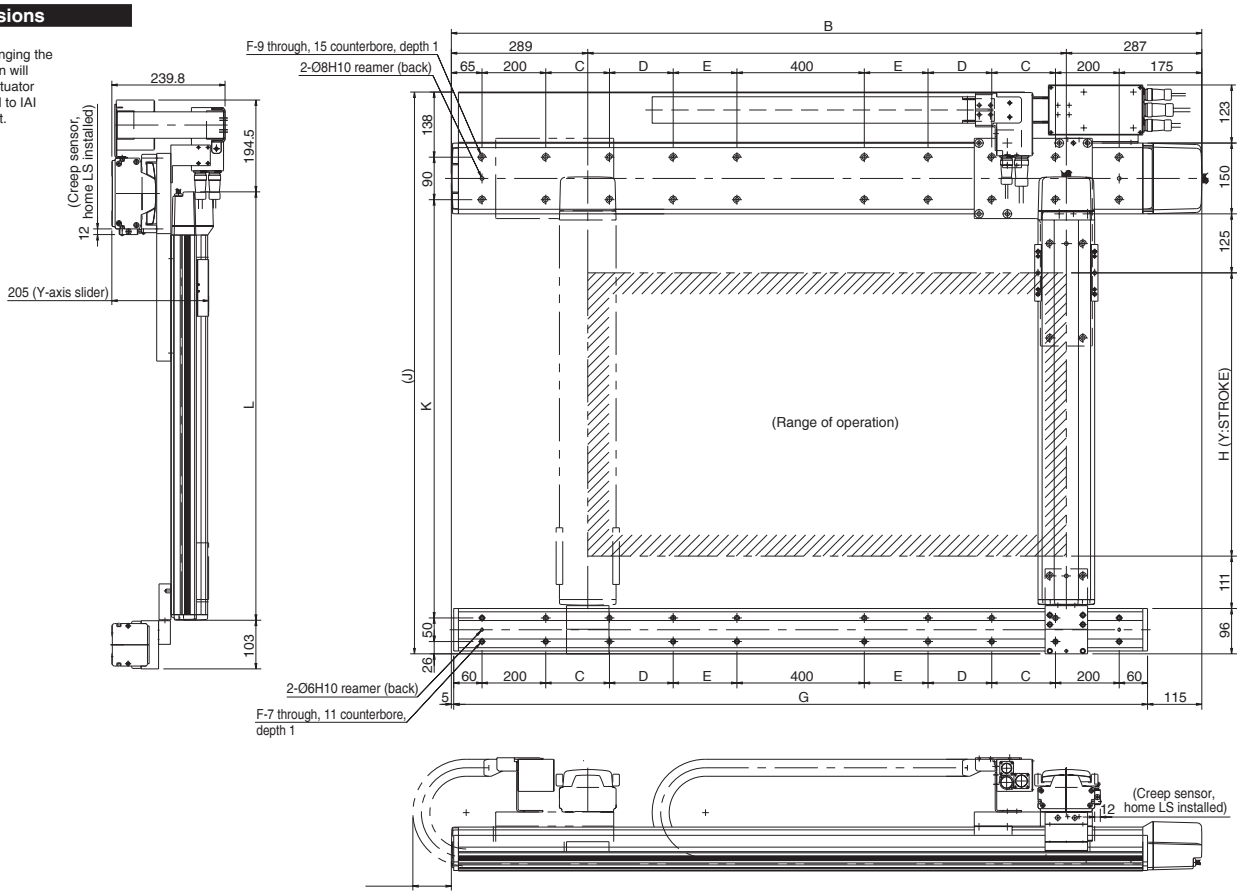

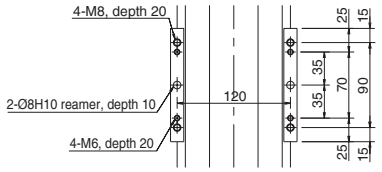

Detail view of Y-axis slider

Y-axis dimensions

H	500	600	700
J	1069.7	1169.7	1269.7
K	786	886	986
L	807.5	907.5	1007.5

* Shipment of a combined type requires frame (to be provided separately).

X-axis dimensions

A	1014	1114	1214	1314	1414	1514	1614	1714	1814	1914	2014	2114	2214	2314	2414	2514
B	1590	1690	1790	1890	1990	2090	2190	2290	2390	2490	2590	2690	2790	2890	2990	3090
C	275	325	375	425	475	525	575	200	200	200	200	200	200	200	200	200
D	0	0	0	0	0	0	0	425	475	525	575	200	200	200	200	200
E	0	0	0	0	0	0	0	0	0	0	0	425	475	525	575	625
F	12	12	12	12	12	12	12	16	16	16	16	20	20	20	20	20
G	1470	1570	1670	1770	1870	1970	2070	2170	2270	2370	2470	2570	2670	2770	2870	2970

ICSA2-G2JH Cartesian Robot: X-Y 2-Axes Configuration, XYG (Y-Axis Gantry) Type

ICSPA2-G2JH Cartesian Robot: X-Y 2-Axes Configuration, XYG (Y-Axis Gantry) Type High-Precision Specification

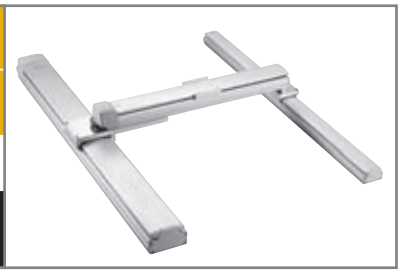

Type	Stroke	Load capacity
XYG type	X-axis: 1000~2500mm Y-axis: 800~1200mm	40kg

■ Model specification items

Series	Type	Encoder type	X-axis stroke + options	Y-axis stroke + options	Applicable controller	Cable length	Cable management
ICSA2	G2JH	A	250AQLNM	120AQBL	T1	5L	CT

* Refer to page 61 for the details of model specification items.

Models/Specifications

Model	Axis configuration		Encoder type	Motor output (W)	Lead (mm)	Stroke (mm) In increments of 100mm	Speed (mm/s) (Note 1)	Load capacity (Note 2)	Positioning repeatability (mm) (Note 3)
ICSA2 [ICSPA2] -G2JH-A-＊＊＊-＊＊＊-T1-△-CT	X-axis	ISA [ISPA] -LXUWX-A-400-20-＊＊＊-T1	Absolute	400	20	1000 ~ 2500	1 ~ 1000	40	±0.02 [±0.01]
	Y-axis	ISA [ISPA] MXMX-A-200-20-＊＊＊-T1		200		800 ~ 1200			
ICSA2 [ICSPA2] -G2JH-I-＊＊＊-＊＊＊-T1-△-CT	X-axis	ISA [ISPA] -LXUWX-I-400-20-＊＊＊-T1	Incremental	400		1000 ~ 2500			
	Y-axis	ISA [ISPA] MXMX-I-200-20-＊＊＊-T1		200		800 ~ 1200			

* In the above model names, ＊＊＊ indicates the stroke/applicable options (stroke is specified in centimeters), and △ the cable length.

Options

Name	Code	Page	Remarks
AQ seal	AQ	➔ P13	
Brake	B	➔ P13	
Creep sensor	C	➔ P13	
Home limit switch	L	➔ P14	
Reverse homing specification	NM	➔ P14	
Guide with ball-retaining mechanism	RT	➔ P14	

Common Specifications

Drive system (Note 4)	Ball screw, rolled C10 [equivalent to rolled C5]
Backlash (Note 5)	0.05mm or less [0.02mm or less]
Guide	Integrated with base
Base	Material: Aluminum with white alumite treatment
Cable length (Note 6)	3L: 3m, 5L: 5m, □L : Length specification
Cable management	CT: Cable track

Load Capacity by Acceleration (kg)

Acceleration (G) \ Y-axis stroke (mm)	800	900	1000	1100	1200
0.3	40.0	40.0	40.0	40.0	40.0
0.4					
0.5					
0.6					
0.7					
0.8					
0.9					
1.0					

Maximum Speed by Stroke (mm/sec)

Axis \ Stroke (mm)	800 ~ 1200	1000 ~ 1400	1500	1600	1700	1800	1900	2000	2500
X-axis	–	1000	950	830	740	650	590	540	300
Y-axis	1000	–	–	–	–	–	–	–	–

Applicable Controller Specifications

Applicable controller	Maximum number of controlled axes	Compatible encoder type	Program operation	Positioner operation	Pulse-train control	Supply voltage	Page
X-SEL(-P/Q)	4(6) axes	Absolute/incremental	○	△		AC100/230V	234
S-SEL	2 axes	Absolute/incremental	○	△		AC100/230V	-
S-/E-CON	1 axis	Absolute/incremental		○ / ○	○ / -	AC100/230V	- / 226

Caution

(Note 1) The maximum speed will vary depending on the stroke. (Refer to the table of maximum speed by stroke.)
(Note 2) The load capacity assumes operation at the rated acceleration (0.3 G). The rated acceleration is the maximum specifiable acceleration for both the ICSA2 and ICSPA2.
(Notes 3, 4, 5) The figures in brackets apply to the ICSPA2.
(Note 6) The cable length measures from the X-axis connector box to the controller. The standard lengths are 3 m and 5 m, but other lengths can also be specified in meters up to 20 m (e.g., 10L = 10 m).

* Refer to page 59 for other points to note.

Cable Track Specification (Cable Management Code: CT)

Dimensions

* Note that changing the home direction will require the actuator to be returned to IAI for adjustment.

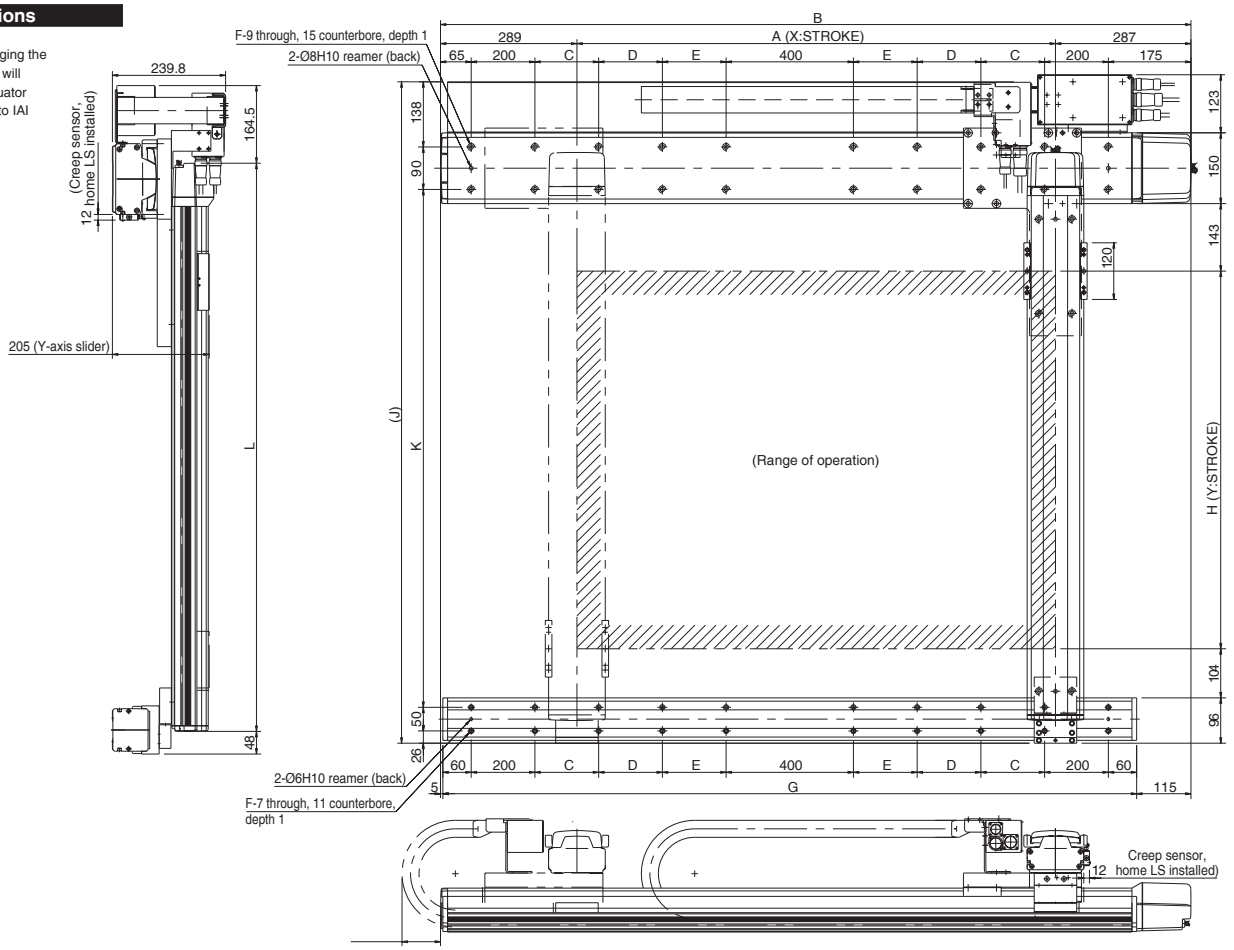

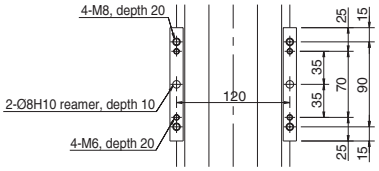

Detail view of Y-axis slider

Y-axis dimensions

H	800	900	1000	1100	1200
J	1380.7	1480.7	1580.7	1680.7	1780.7
K	1097	1197	1297	1397	1497
L	1203.5	1303.5	1403.5	1503.5	1603.5

* Shipment of a combined type requires frame (to be provided separately).

X-axis dimensions

A	1014	1114	1214	1314	1414	1514	1614	1714	1814	1914	2014	2114	2214	2314	2414	2514
B	1590	1690	1790	1890	1990	2090	2190	2290	2390	2490	2590	2690	2790	2890	2990	3090
C	275	325	375	425	475	525	575	200	200	200	200	200	200	200	200	200
D	0	0	0	0	0	0	0	425	475	525	575	200	200	200	200	200
E	0	0	0	0	0	0	0	0	0	0	0	425	475	525	575	625
F	12	12	12	12	12	12	12	16	16	16	16	20	20	20	20	20
G	1470	1570	1670	1770	1870	1970	2070	2170	2270	2370	2470	2570	2670	2770	2870	2970