ROBO CYLINDER

IAI
Quality and Innovation

RoboCylinder Profibus Gateway

Product Specification (Hardware + Software)

First Edition

IAI Industrieroboter GmbH
Ober der Röth 4
D-65824 Schwalbach / Taunus
Phone: 06196/8895-0/Fax: 06196/8895-24
E-Mail: info@iai-gmbh.de
Internet: http://www.eu.iai-gmbh.de

Document RC-Gateway_v3_eng
RoboCylinder Profibus-Gateway
EU Version 1 E, March 2005

www.robocylinder.de

Gateway

Product Specification (Hardware)

Drawing No.
ED-051-0-001-1-***-0

Change History

Rev.	Contents	Date	Drawn	Approved
0	Issued the initial drawing.	04.11.24	T. Kubo	

Table of Contents

1. Overview 4
1.1. Features 4
1.2. Product Configuration 4
2. Product Specifications 5
2.1. General Specifications 5
2.2. Appearance/Outline Drawing 6
2.2.1. Name and Function of Each Part 6
2.2.1.1. [1] LED Indicator 6
2.2.1.2. [2] Fieldbus Module 7
2.2.1.2.1. CC-Link 7
2.2.1.2.2. ProfiBus 9
2.2.1.2.3. DeviceNet 10
2.2.1.3. [3] Switch for User Setting 11
2.2.1.4. [4] Modbus Connector 12
2.2.1.5. [5] Port Switch 13
2.2.1.6. [6] T.P. Connector 13
2.2.1.7. [7] Power/EMG Connector 13
2.2.2. External Dimensions 14
2.2.3. Performance/Functionality 15
2.2.3.1. Modbus Interface 15
2.2.3.2. T. P. Interface (Teaching Port) 15
2.2.3.3. EMG Line (S1, S2) 15
2.2.3.4. Port Control Input/Port Switch 16
3. Setup 17
3.1. Environment 17
3.1.1. Environmental Conditions 17
3.1.2. Installation 17
3.1.3. Handling 18
4. Wiring 19
4.1. Wiring Overview 19
4.2. Connecting the Power/EMG Connector 19
4.3. Grounding 20
4.4. Modbus Communication Line Wiring 21
4.5. Controller and EMG Line Wiring Examples 22
4.5.1. Wiring Example 1 22
4.5.2. Wiring Example 2 23

1. Overview

This document describes the hardware specifications of the product. Refer to the separately provided “Firmware Specifications: ED-051-8-001-1-***-□” for the functional and firmware-dependant specifications.

1.1. Features

- This product provides a gateway function that connects a host PLC and the single-axis controllers manufactured by IAI via various types of fieldbuses and Modbus.
- The product can be connected to Modbus-compatible single-axis controllers (currently “RCP2” and “ERC”).
- The ANYBUS-S Series manufactured by HMS has been loaded as a fieldbus module. “CC-Link,” “ProfiBus” and “DeviceNet” are currently supported. It can be connected to a teaching pendant or PC software.

1.2. Product Configuration

No.	Fieldbus type	Product specifications	Remarks
1	CC-Link	CC-Link specifications	
2	ProfiBus	ProfiBus specifications	
3	DeviceNet	DeviceNet specifications	
4	~~Ethernet~~	~~Ethernet specifications~~	

2. Product Specifications

2.1. General Specifications

Item		Specification
Power supply voltage		24 V ± 10%
Power supply current		300 mA max
Environment	Operating temperature	0 to 4°C
	Operating humidity	85% RH or less (non-condensing)
	Operating atmosphere	Not subject to corrosive gas
	Storage atmosphere	-10 to 65°C
	Storage humidity	90% RH or less (non-condensing)
	Vibration resistance	10 to 57 Hz in X, Y and Z directions; single amplitude --- 0.035 mm (continuous), 0.075 mm (intermittent)
Protection degree		IP20
Weight		480 g or less
External dimensions		35 (W) x 178.5 (H) x 68.1 (D) mm

2.2. Appearance/Outline Drawing

2.2.1. Name and Function of Each Part

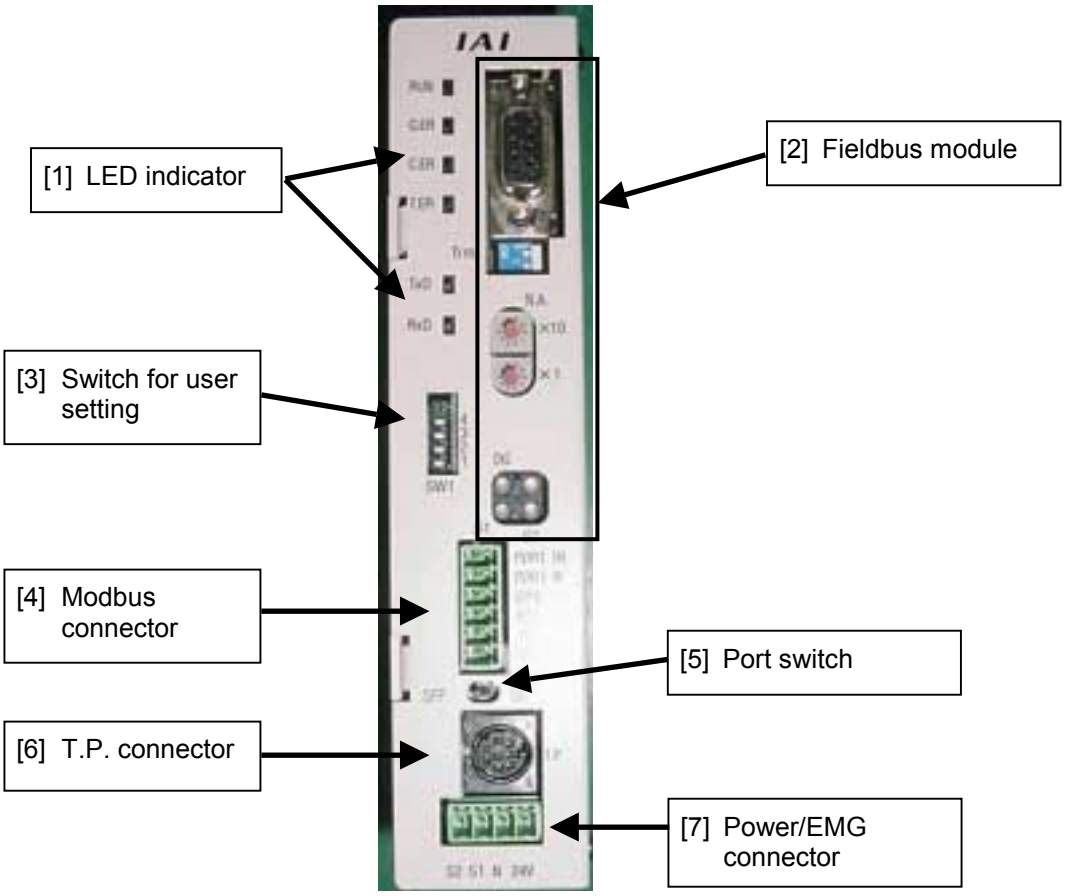

2.2.1.1. [1] LED Indicator

Gateway status monitoring LED

Symbol	Indicator color	Description
RUN	Green	Refer to the separately provided “Firmware Specifications.”
G.ER	Red	Refer to the separately provided “Firmware Specifications.”
C.ER	Red	Refer to the separately provided “Firmware Specifications.”
T.ER	Red	Refer to the separately provided “Firmware Specifications.”
TxD	Green	Modbus sending data: Blinking during communication
RxD	Green	Modbus receiving data: Blinking during communication

2.2.1.2. [2] Fieldbus Module

2.2.1.2.1. CC-Link

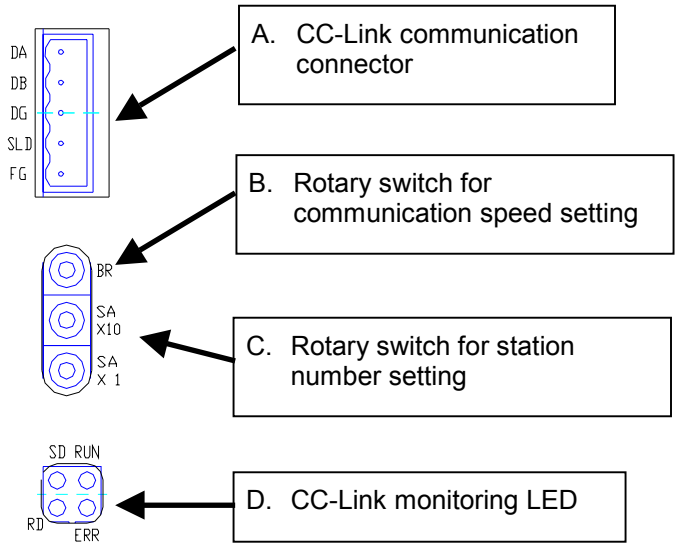

CC-Link communication connector

Signal name	Description
DA	Communication line A
DB	Communication line B
DG	Digital ground
SLD	Shield. Connecting the cable shield. Connected to “FG” and the frame.
FG	Frame ground Connected to “SLD” and the frame.

* The “mating connector (SMSTB2.5/5-ST-5.08AU by Phoenix Contact),” “terminating resistance cable 110 Ω” and “terminating resistance cable 130 Ω” are supplied.

B. Rotary switch for communication speed setting
Use the rotary switch “BR” to set the communication speed.

Rotary switch setting number	Communication speed
0	156 kbps
1	625 kbps
2	2.5 Mbps
3	5 Mbps
4	10 Mbps
Setting to 5 or more prohibited	Error

C. Rotary switch for station number setting
Use the two switches to set the station number between 1 and 64.

Rotary switch setting number	Description
SA × 10	To set the second digit
SA × 1	To set the first digit

[Example] To set the station number to “12”
Set “SA x 10” to “1.”
Set “SA x 1” to “2.”

D. CC-Link monitoring LED

Name	Indicator color	Description
RUN	Green	The LED will be lit when the communication is started, and will be unlit if the communication is interrupted for longer than a specified period of time.
SD	Green	The LED will blink while sending data.
RD	Green	The LED will blink while receiving data.
ERR	Red	LED lit: Error on receiving data addressed to the self station LED blinking: When any changes are made during communication to the setting of the rotary switch for communication speed setting or to the setting of the rotary switch for station number setting

2.2.1.2.2. ProfiBus

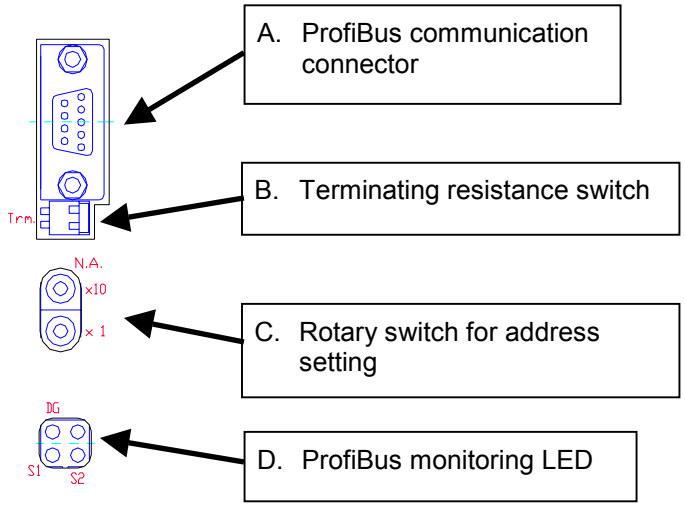

A. ProfiBus communication connector
D-sub connector

Pin No.	Signal name	Description
3	B-Line	Communication line B
8	A-Line	Communication line A
Housing	Shield	Shield Connected to the frame.

* The mating connector is not supplied.
* Pins 1, 2, 4, 5, 6, 7 and 9 are not connected.

B. Terminating resistance switch

Status	Description
ON	Terminating processing is enabled.
OFF	Terminating processing is disabled.

C. Switch for address setting
Use the two switches to set the station number between 1 and 64.

Rotary switch setting number	Description
× 10	To set the second digit
× 1	To set the first digit

D. ProfiBus monitoring LED

Name	Indicator color	Description
S1	Red	Offline status when the LED is lit
S2	Green	Online status when the LED is lit
DG	Red	LED unlit: No error Blinking at 1 Hz: Configuration data error Blinking at 2 Hz: Parameter data error Blinking at 4 Hz: ProfiBus communication initialization error

2.2.1.2.3. DeviceNet

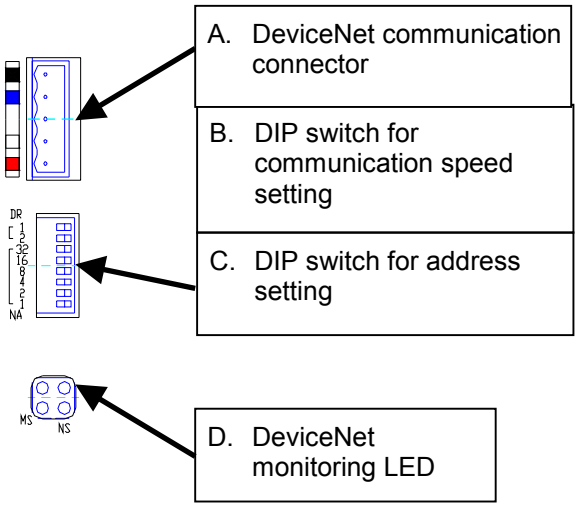

A. DeviceNet communication connector

Pin color	Description
Black	Negative side of the power supply cable
Blue	Communication data low side
–	Shield
White	Communication data high side
Red	Positive side of the power supply cable

B. Switch for communication speed setting

Communication speed	DR1	DR0
125 kbps	OFF	OFF
250 kbps	OFF	ON
500 kbps	ON	OFF
Setting prohibited	ON	ON

C. Switch for address setting

Node address (MAC ID)	NA32	NA16	NA8	NA4	NA2	NA1
0	OFF	OFF	OFF	OFF	OFF	OFF
1	OFF	OFF	OFF	OFF	OFF	ON
2	OFF	OFF	OFF	OFF	ON	OFF
• • •	• • •	• • •	• • •	• • •	• • •	• • •
61	ON	ON	ON	ON	OFF	ON
62	ON	ON	ON	ON	ON	OFF
63	ON	ON	ON	ON	ON	ON

D. DeviceNet monitoring LED

Name	Indicator color	Indicator status	Description
MS	Green	Lit	Operating normally
	Red	Lit	Hardware error
		Blinking	There is a minor error such as a DIP switch setting error. The system can be restored by reconfiguring the settings, etc.
	–	Unlit	Cases such as power is not supplied
NS	Green	Lit	The connection has been established and the system is in communication normally.
		Blinking	Online, but the connection is not established.
	Red	Lit	Cases such as a node address is duplicated Communication cannot be established.
		Blinking	Communication error (communication timeout error, etc.)
	–	Unlit	Cases such as power is not supplied to the DeviceNet

2.2.1.3. [3] Switch for User Setting

No.	Description
1	Refer to the separately provided “Firmware Specifications.”
2	Refer to the separately provided “Firmware Specifications.”
3	Refer to the separately provided “Firmware Specifications.”
4	Refer to the separately provided “Firmware Specifications.”

2.2.1.4. [4] Modbus Connector

This is a connector to connect the port control input and the Modbus communication line.
Connector model
Gateway side: MC1.5/6-G-3.5 (by Phoenix Contact)
Mating side: MC1.5/6-ST-3.5 (by Phoenix Contact)

Signal name	Description
PORT IN	Port control input
PORT N	Port control input N
SGA	Communication line A
SGB	Communication line B
GND	Digital ground
FG	Frame ground Connected to the frame.

* The mating connector is supplied.

2.2.1.5. [5] Port Switch

"T.P. connector" output changeover switch

Status	Description
ON	Supply the power to the teaching pendant. The EMG line connecting "S1" and "S2" to the teaching pendant is internally open.
OFF	Cut off the power to the teaching pendant. The EMG line connecting "S1" and "S2" to the teaching pendant is internally shorted.

2.2.1.6. [6] T.P. Connector

Connector used to connect the teaching pendant/PC cable

2.2.1.7. [7] Power/EMG Connector

Connector used to connect the power supply input and the emergency stop line
Gateway side: MO1.5/6-GL-3.81 (by Phoenix Contact)
Mating side: MC1.5/6-ST-3.81 (by Phoenix Contact)

Symbol	Description
24V	Positive side of the 24-V power supply
N	Negative side of the 24-V power supply
S1 S2	Emergency-stop switch contacts: When the port [2] is ON, these contacts open the emergency-stop switch line to the teaching pendant. When the port is OFF, S1 and S2 are shorted.

* The mating connector is supplied.

2.2.2. External Dimensions

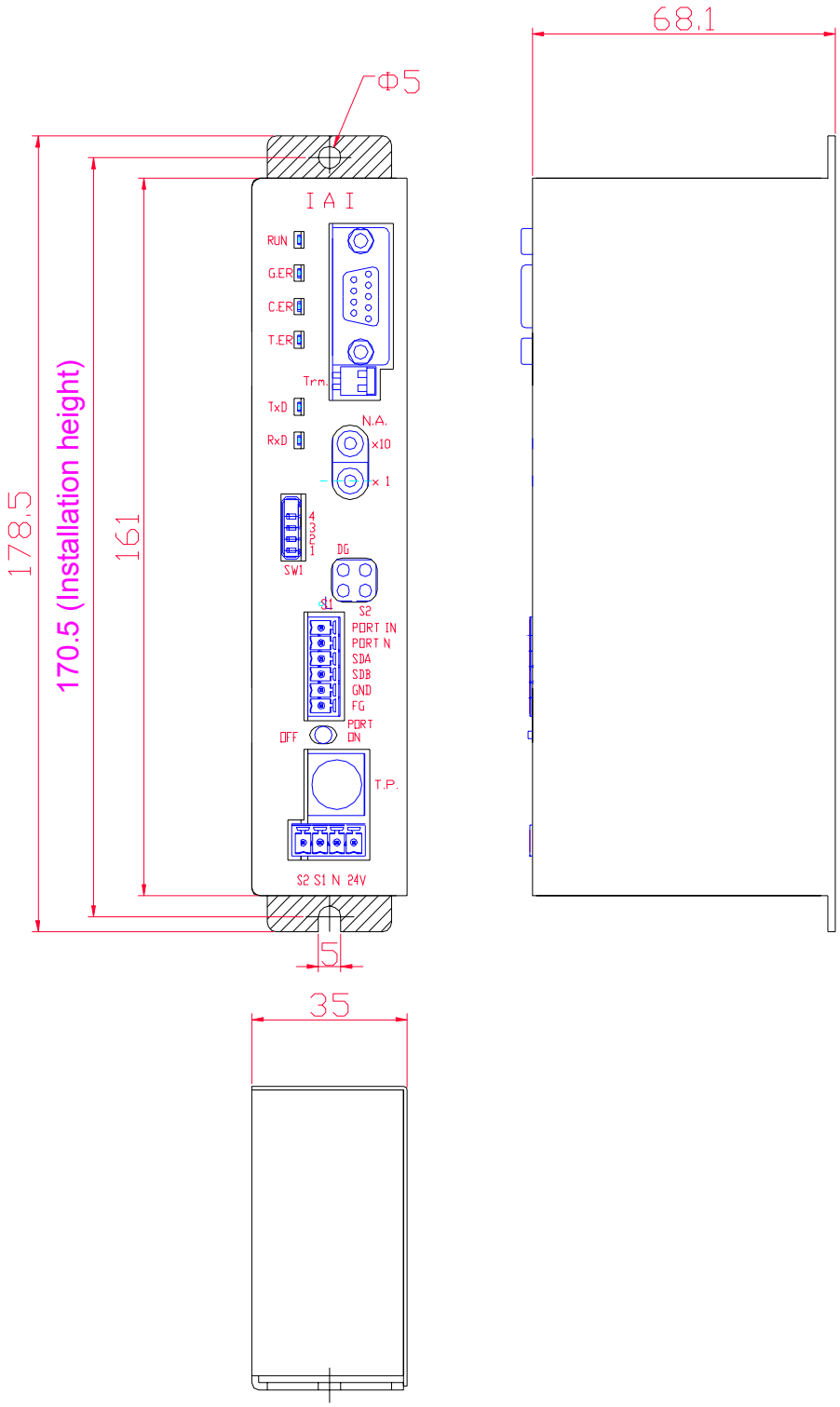

2.2.3. Performance/Functionality

2.2.3.1. Modbus Interface

Specification item	Content
Communication	EIA485
Communication protocol	MODBUS
Interface IC	EIA485-compliant part (75176)
Terminating resistance	Present (internal terminating processing)

2.2.3.2. T. P. Interface (Teaching Port)

Specification item	Content
Communication	RS485
Communication protocol	MODBUS
Interface IC	EIA485-compliant part (75176)
Terminating resistance	Present (internal terminating processing)

2.2.3.3. EMG Line (S1, S2)

These lines are connected to the EMG switch on the teaching pendant via the T.P. connector. (Refer to 2.2.3.4, “Port Control Input/Port Switch,” for the internal circuit diagram.)

Specification item	Content
Rated voltage	30 VDC
Rated current	1 A*

* The rated current value is limited by the internal “EMG switching contacts” specifications. If multiple relays are to be connected, make sure the rated current value is not exceeded.

2.2.3.4. Port Control Input/Port Switch

It is possible to control the port status externally by using this input.

Specification item	Content
Input voltage	24 VDC ± 10%
Input current	7 mA
Leak current	1 mA max
Insulation method	Not insulated
External device connection	No-voltage contacts *

* Only the “no-voltage contacts” connection is recommended.

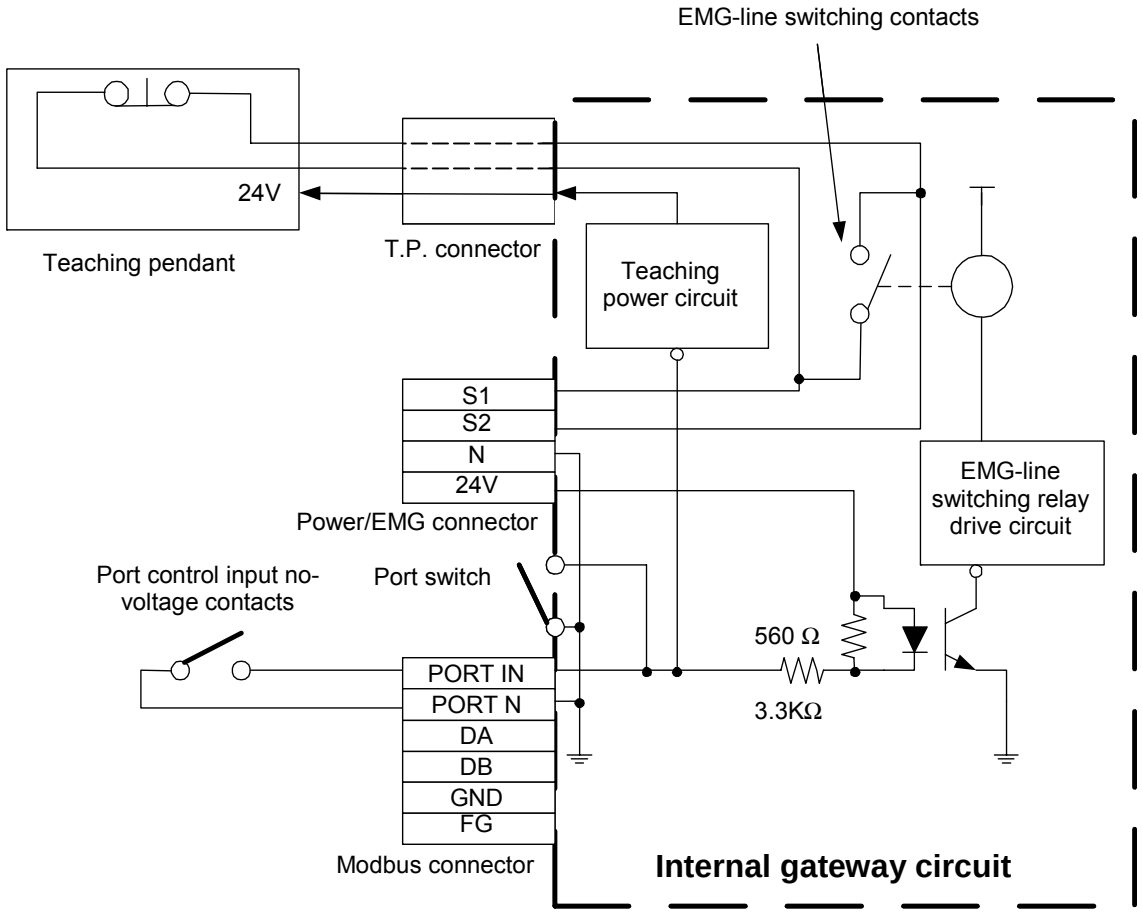

Port control input	Port switch	Teaching pendant power	EMG-line switching contacts
OFF	OFF	Cut off	Shorted
ON	OFF	Supplied	Open
OFF	ON	Supplied	Open
ON	ON	Supplied	Open

3. Setup

3.1. Environment

3.1.1. Environmental Conditions

Operating temperature	0 to 40°C	Non-freezing
Operating humidity	0 to 85%	Non-condensing
Storage temperature	-10 to 65°C	Non-freezing
Vibration	5.9 m/s^2 or less	
Dust resistant	IP20	
Atmosphere	Indoor: An atmosphere not subject to corrosive or inflammable gas, oil mist or dust	

3.1.2. Installation

1. Be sure to provide a clearance of at least 50 mm both above and below the controller.
2. The controller should not be exposed to an excessive heat source such as direct sunlight or a heat treatment furnace.
3. Be sure to provide a sufficient clearance (100 mm or more) at the front side of the controller to make room for the wiring.
4. When installing the controller, make sure the ambient temperature does not exceed the operating environmental conditions.
5. Provide class D grounding.

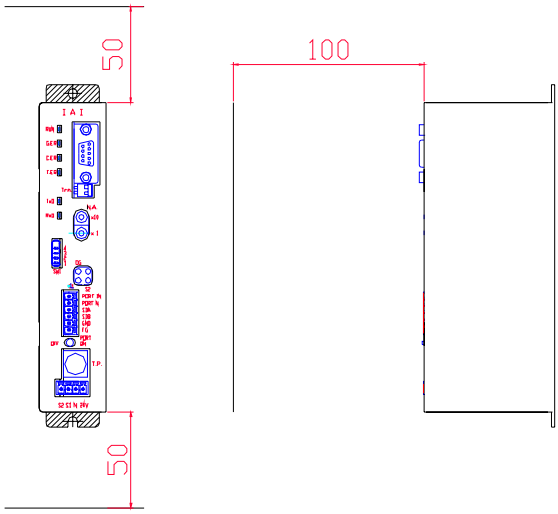

3.1.3. Handling

1. Outdoor use
2. A place subject to corrosive or inflammable gas, oil mist, moisture or dust
3. A place with intense electric or magnetic fields
4. Storing in the same board with high-voltage devices
5. Using the same power supply with devices that generate a high level of noise
6. A place subject to constant vibration
7. In a vacuum environment
8. Explosive environment
9. Using the controller for devices that require special quality or reliability (such as medical, aviation and nuclear-power devices)

4. Wiring

4.1. Wiring Overview

*** The GND level of the input power source must be the same as that of the connecting controller.**

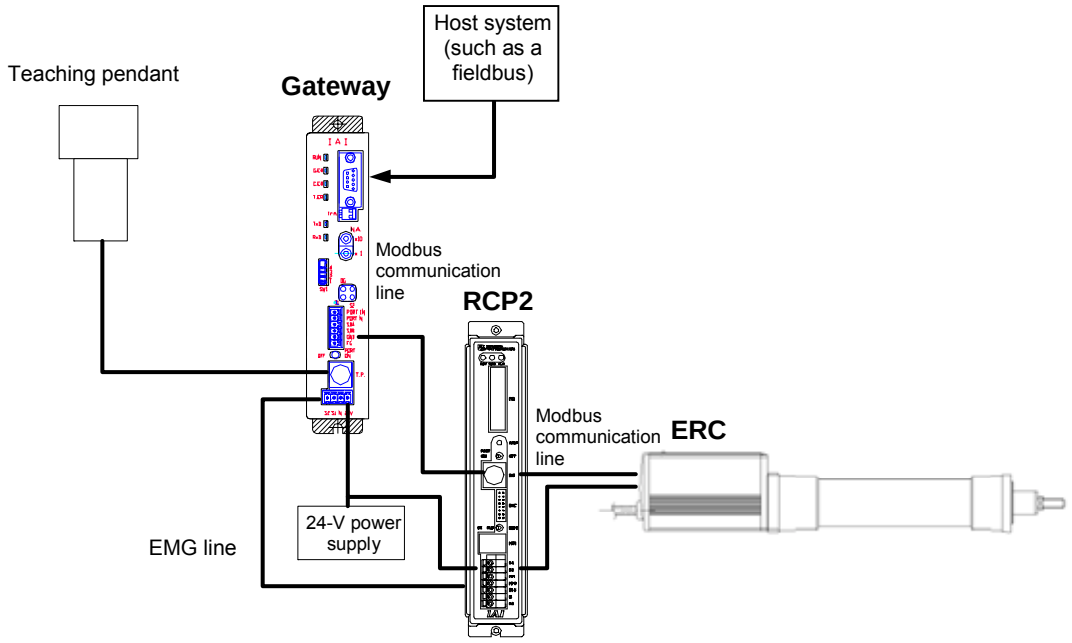

*

4.2. Connecting the Power/EMG Connector

Use cables that meet the following specifications for wiring.

Item	Specification
Applicable cable for the power input (24V, N)	Single wire: 1.0 mm^2 Stranded wire: 0.8 to 1.3 mm^2 / AWG: 18 to 16
Applicable cable for the EMG input (S1, S2)	Single wire: 0.08 to 1.5 mm^2 Stranded wire: 0.08 to 1.5 mm^2 / AWG: 28 to 16

4.3. Grounding

Place the frame directly onto the ground, or use a cable as short as possible, as shown in the figure below.

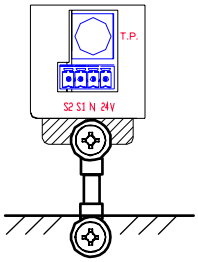

4.4. Modbus Communication Line Wiring

Specification item	Content
Recommended cable	AWG 22
Maximum cable length	100 m or less *1
Terminating resistance	220 Ω *2

* Recommended cable: HK-SB/20276XL 2P x 22AWG (by Taiyo Electric Wire & Cable)
* 1: Total length for the communication path
* 2: Use a bus connection for the communication path and place the terminating resistance on either end.

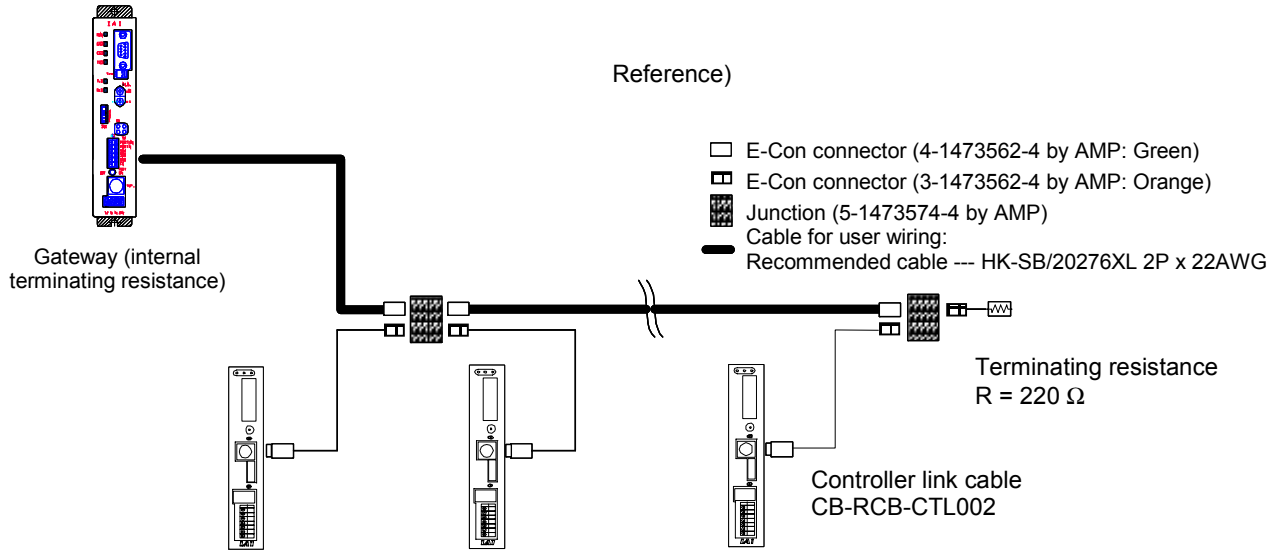

* E-Con connector (4-1473562-4 by AMP: Green) is a model when the recommended cable is used.

4.5. Controller and EMG Line Wiring Examples

By using the “S1” and “S2” inputs of the Gateway, the EMG switch on the teaching pendant connected to the Gateway can be used to bring the controller to an emergency stop status.

4.5.1. Wiring Example 1

If the teaching pendant is connected to the Gateway and each controller based on the wiring shown in the figure below, the EMG switch on the teaching pendant or the external EMG switch can be used to bring all the controllers to an emergency stop status.

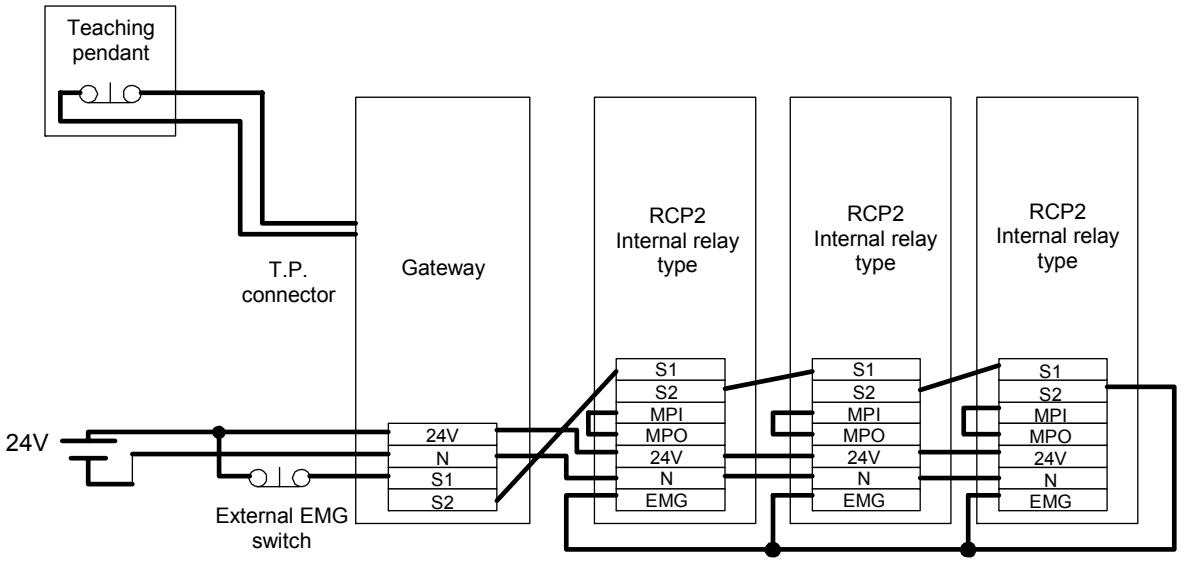

4.5.2. Wiring Example 2

In the case of wiring shown in the figure below, the teaching pendant connected to the Gateway or the external EMG switch can be used to bring all the controllers to an emergency stop status.

*** If the teaching pendant is connected to the controllers, the EMG switch on the teaching pendant will be disabled. Therefore, this wiring example does not apply when the teaching pendant is connected to the controllers.**

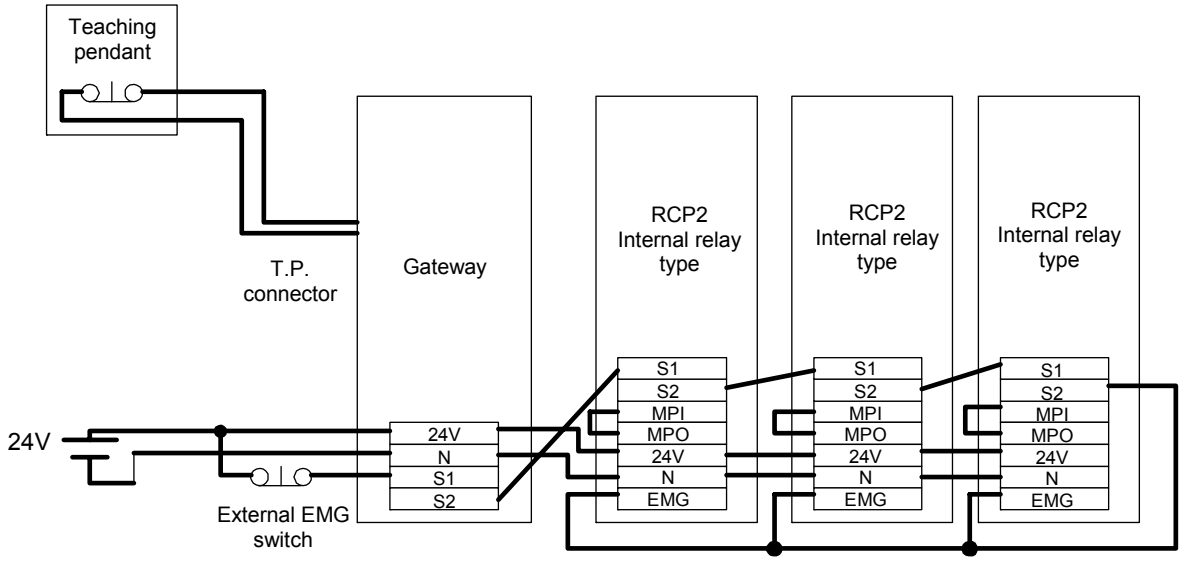

End of document

Software Section	Gateway	Software Specification

Profibus Gateway Software Design Specification

Revision 3

Rev.	Comment	Date	Drawn	Checked	Approved
0	Issued the initial version as a tentative specification.	04/09/01	Ikehira		Yamada
1	Made changes throughout the document.	04/11/15	Yamada		
2	Changed Chapters 5 and 6 and Appendixes.	04/11/27	Yamada		
3	Made changes relating to the additional push-motion operation by numerical specification.	05/03/25	Ikehira		Yamada

Approved	2004.09.01	M. Yamada	**Title**
Checked			Profibus Gateway Software Design Specification
Drawn	2004.09.01	M. Ikehira	
IAI Corporation			**Drawing No.**
			ED-051-8-001-0-002-3

Table of Contents

Table of Contents 2
Change History 3
Abbreviation Table 3
References 3
1. Overview 4
1-1. Overview of Data Flow 5
1-2. General Firmware Processing Flow 6
2. Name of Each Part and Functional Overview 7
2.1. Gateway Status Indicator LED [1] 8
2.2. Controller Communication Status LED [2] 8
2.3. Mode Setting Switch [3] 8
2.4. Port Control/Port Switch Inputs and Controller Communication Line [4] 9
2.5. Profibus-DP Communication Line [5] 10
2.6. Teaching Device Connector [6] 10
2.7. Power Input [7] 10
3. Profibus Remote I/O Assignments 11
3.1. Movement by Numerical Specification 11
3.2. Movement by Position Number Specification 14
3.3. Gateway Control/Status Word Assignments 16
3.4. Signal Timing Diagram 17
4. Overview of Controller Communication (Modbus Communication) 20
4.1. Overview of Communication Procedure 20
4.2. Communication Performance 21
5. System Building Procedure 22
5.1. Settings for Controller Communication 22
5.2. Settings for Profibus-DP Communication 23
5.3. Function Block/Function (FB/FC) Support for S7 29
6. Firmware Updating Procedure 31
Appendix 1. Resetting Controller Alarms 32
Appendix 2. Direct Connection of the Modbus Master and Controller 33
Appendix 3. Sample Programs for S7-300 34
Example of Using RC_NVC and GW_CTL 34
Appendix 4. Supply Format and Use Procedure of FB/FCt 37

Change History

Revision No.	Date	In-charge person	Chapter	Description
0	2004/09/01	Yamada	-	Issued the initial version as a tentative specification.
1	2004/11/10	Yamada		Made changes throughout the document.
2	2004/12/02	Yamada	5.2	Corrected clerical errors.
			5.3	Changed the entire section.
			Appendixes 2, 3, 4	Added.
			1., 2.3, 3.	Changed/added descriptions regarding movement by position number specification.
			6.	Added.
2.1	2005/02/03	Yamada	2.3	Added the updating mode.
			4.1	Changed “type code” to “index table.”
			6.	Changed the entire section.
	2005/02/04	Ikehira	4.1	Changed “Stp on” to “servo off.”
3	2005/03/18	Yamada	1., .2.3, 3., 5., A	Made changes relating to the additional push-motion operation by numerical specification. Deleted the EMG command (EMG has the same effect as Servo off).
			5.3	Deleted the function block RC_POS. Since movement by position number specification can be easily achieved, this function block was found redundant.

Abbreviation Table

FB	Function Block
FCt	Function

References

[1] Internal Specification for Single-Axis Controller Virtual Register Model (ED-046-8-002-***-1)
[2] Hardware Development Specification for Gateway Board (ED-051-4-001-0-***-**)
[3] Software Design Document for DeviceNet Gateway (ED-051-8-003-0-***-**)

1. Overview

The Profibus-DP/Modbus Gateway is a gateway between the Modbus communication protocol, which is to be instituted as a single-axis sub-network standard, and the Profibus-DP communication protocol. In a TP connection, it simply serves as a bridge to relay Modbus frames.
The RCP2 and ERC are currently considered as would-be Modbus slave devices. Although the connectable models are likely to increase in the future, only these two models will be supported for the time being (since the ERC is a subset of the RCP2, practically only one model will be supported).
The physical standard applicable to Modbus is RS-485. Although the maximum range of slave addresses on Modbus is 1 to 247, a more practical range of 1 to 16 will be adopted.
All data exchanged between Profibus and Modbus are saved in internal memory first, and then transmitted cyclically.
The Gateway is viewed from the PLC user program in the form of Fieldbus remote I/Os.
Various assignment patterns are desired for Fieldbus remote I/Os and Modbus memory depending on the application, so desirably the assignments should be configurable. For the time being, however, several assignment patterns will be provided for selection by the user.
As for the control method, two methods—one based on direct specification of position, speed and acceleration/deceleration, and the other based on movement by position number specification/position data write—are planned.
Incidentally, the term “Gateway” used commonly in relation to communication technology refers to a device that converts data on a network to enable their transmission between different media and protocols.

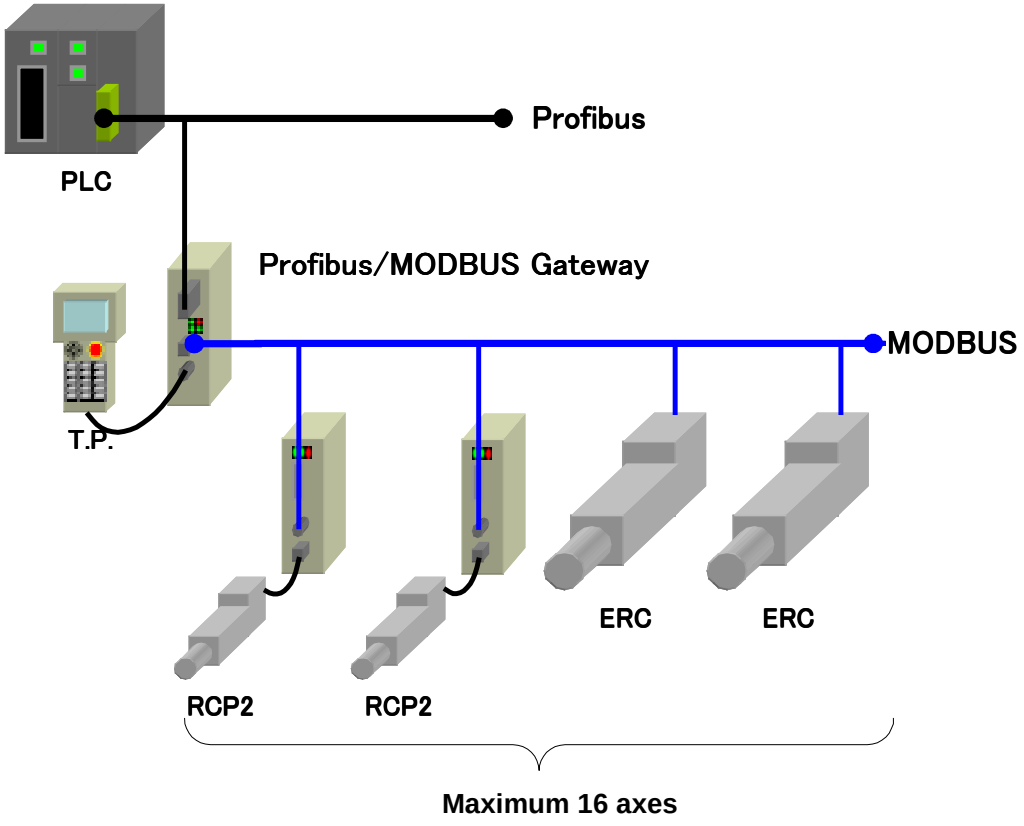

Fig. 1 Overview of Application System

1.1. Overview of Data Flow

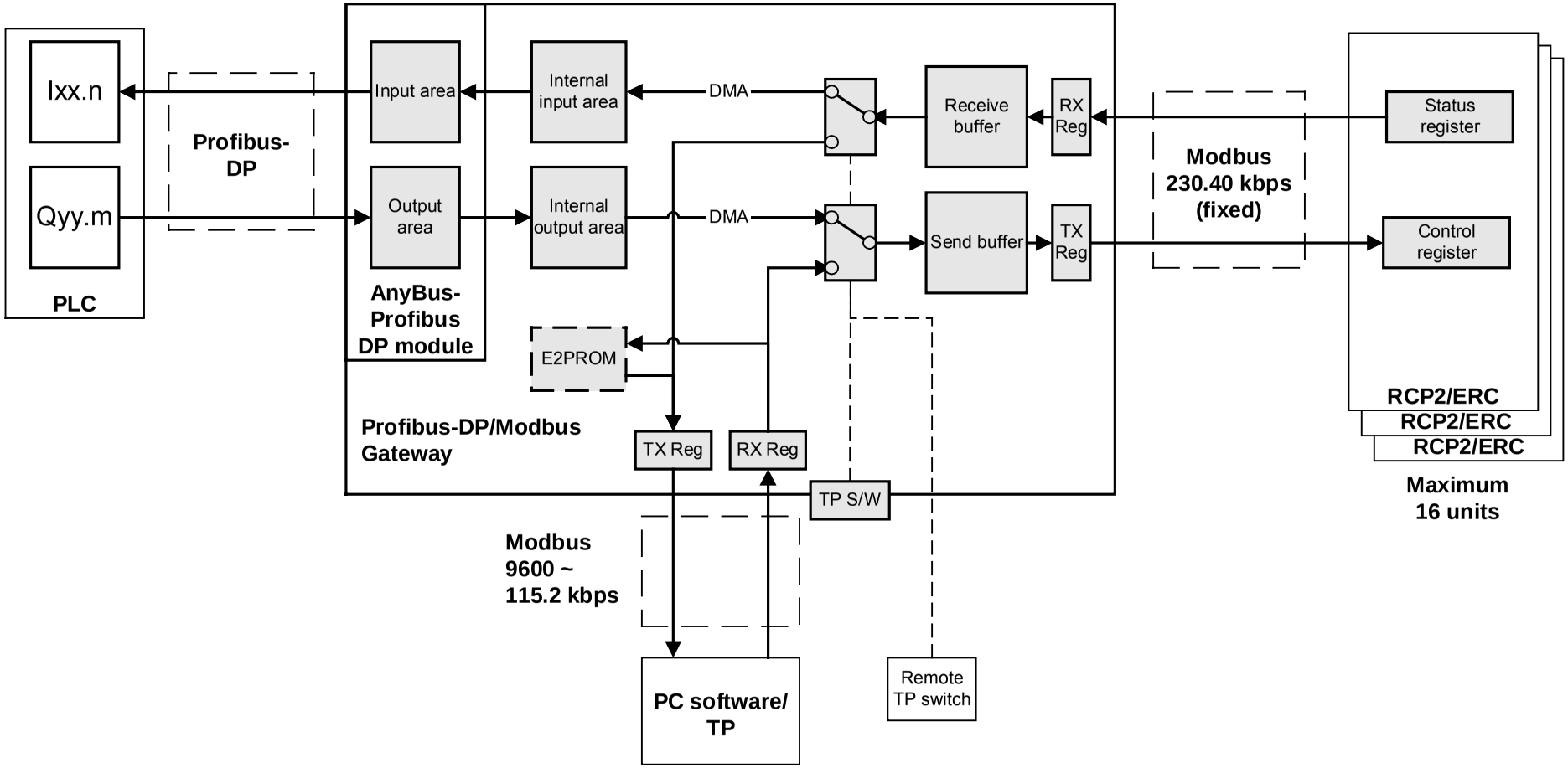

Fig. 2 Overview of Data Flow

1.2. General Firmware Processing Flow

The basic processing method is the status transition processing method whereby the status code is changed in accordance with each detected event to change the processing to be performed.

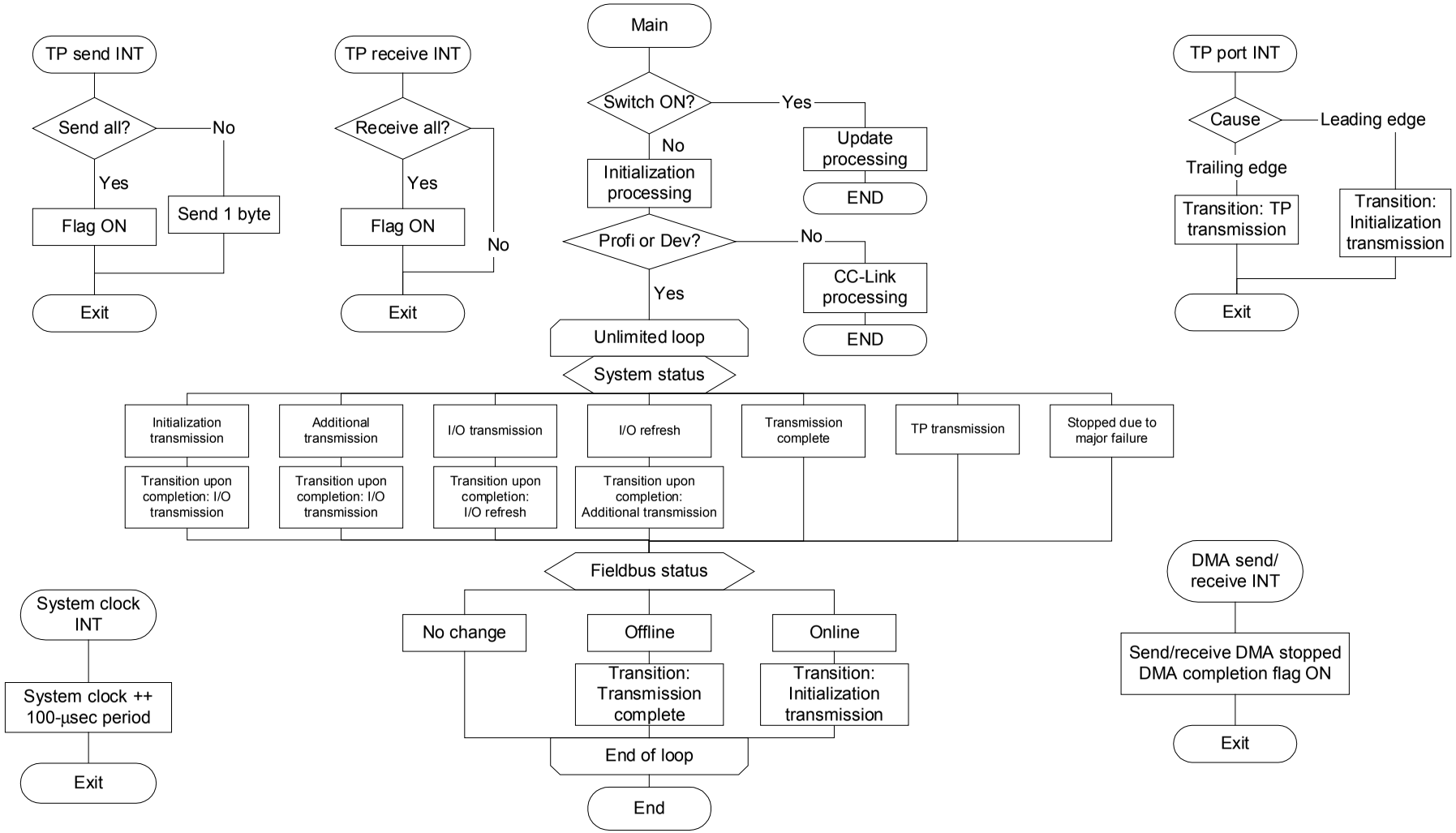

Fig. 3 General Firmware Processing Flowchart

2. Name of Each Part and Functional Overview

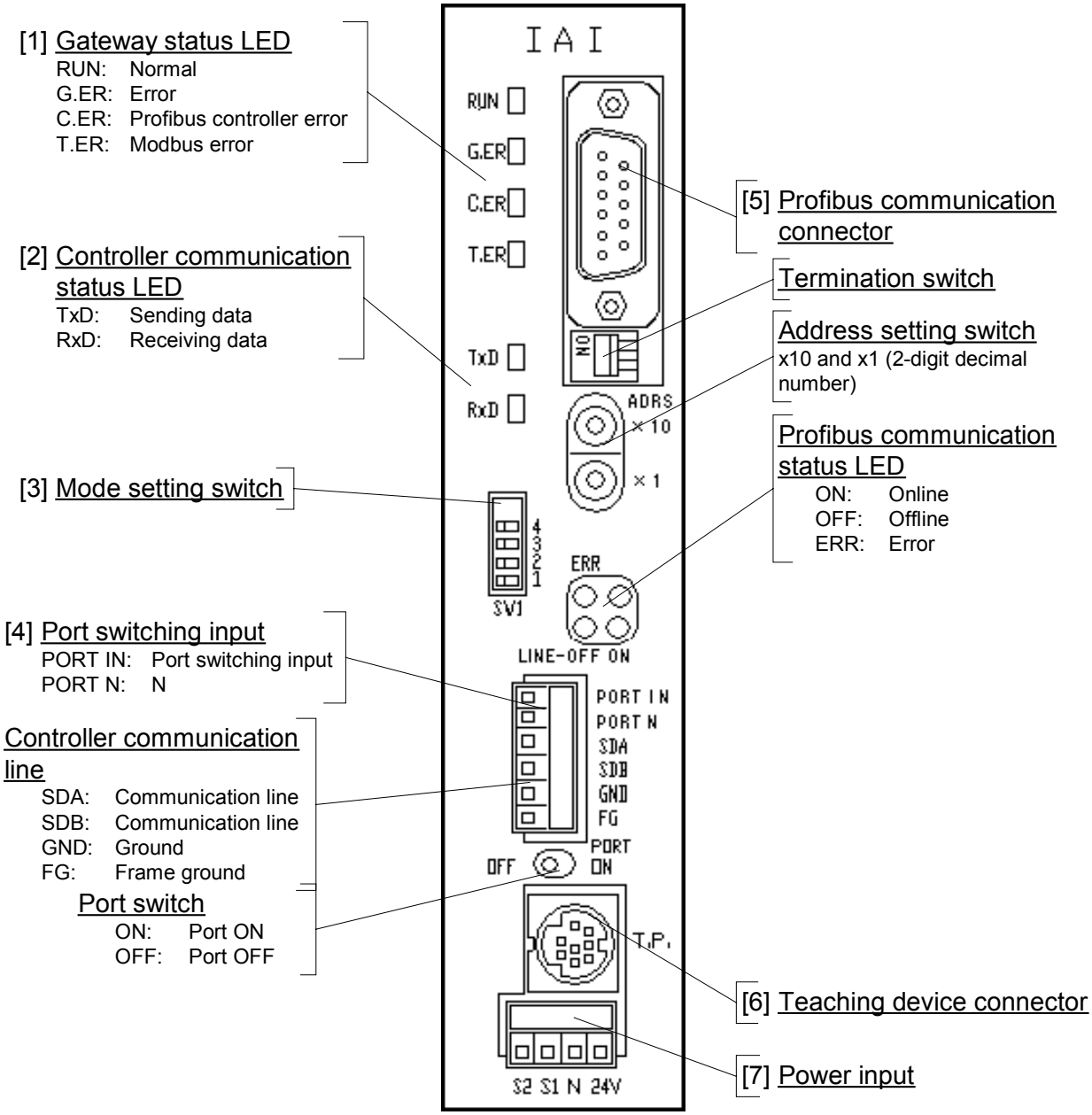

Fig. 4 Front View of Gateway

2.1. Gateway Status Indicator LED [1]

Name	Indicator status	Meaning
RUN	Steady green light	The Gateway CPU is operating.
	Unlit	The CPU is stopped. If the RUN LED remains unlit even after the power is turned on, it suggests a problem with the Gateway CPU.
G.ER	Steady red light	The Gateway CPU has a problem or is stopped due to a major failure.
	Unlit	The above problem conditions do not exist.
C.ER	Steady red light	The Profibus communication control part has a problem or cannot be recognized by the Gateway CPU. Refer to the explanation under [5] for the Profibus communication status. Even if this LED is lit, a teaching device can be connected as long as the RUN LED is lit.
	Unlit	The above problem conditions do not exist.
T.ER	Steady red light	A communication error (no response, overrun, framing error, CRC error, etc.) occurred while communicating with the controller defined in the Gateway control register.
	Unlit	The above problem conditions do not exist.

2.2. Controller Communication Status LED [2]

The controller communication status LEDs indicate whether or not the Gateway is communicating with the controller. They blink when the Gateway is relaying a host PLC or teaching device and the controller.

Name	Indicator status	Meaning
TxD	Steady green light (Blinking)	The Gateway is sending data to the controller.
	Unlit	The above event does not take place.
RxD	Steady green light (Blinking)	The Gateway is receiving data from the controller.
	Unlit	The above event does not take place.

2.3. Mode Setting Switch [3]

The pins of the mode setting switch set the operation mode of the Gateway. These switch pin statuses are reflected in the Gateway status word MOD.

For details, refer to 5.2, “Settings for Profibus-DP Communication.”

2.4. Port Control/Port Switch Inputs and Controller Communication Line [4]

2.4.1. Port Switch and EMG Circuit

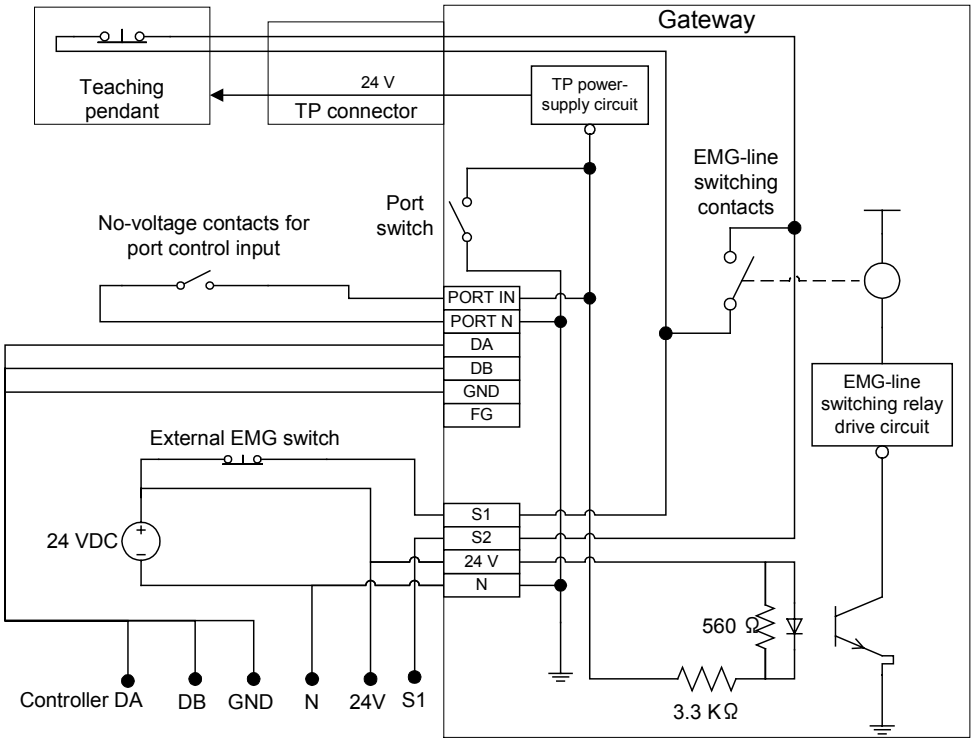

Port control input	Port switch	Teaching pendant power	EMG-line switching contacts
OFF	OFF	Cut off	Shorted
ON	OFF	Supplied	Open
OFF	ON	Supplied	Open
ON	ON	Supplied	Open

Fig. 5 Port Switch and EMG Circuit

2.4.2. Port Switch

Signal name	Description	
PORT IN	Port control input	Input voltage: 24 VDC ± 10% Input current: 7 mA Leak current: 1 mA max Insulation method: Not insulated. External device connection: No-voltage contacts are recommended.
PORT N	Port control input N	
Port switch	ON	Supply the power to the teaching pendant. The EMG line connecting "S1" and "S2" to the teaching pendant is internally open.
	OFF	Cut off the power to the teaching pendant. The EMG line connecting "S1" and "S2" to the teaching pendant is internally open.

* Connectors (MC1.5/6-ST-3.5 by Phoenix Contact) are supplied.

2.4.3. Controller Communication (Modbus) Line

Signal name	Description
SGA	Communication line A
SGB	Communication line B
GND	Digital ground
FG	Frame ground. Connected to the frame.
Modbus cycle time (Mt)	Refer to 4.2, "Communication Performance."

2.5. Profibus-DP Communication Line [5]

2.5.1. Profibus Connector Pin Assignments (D-sub, 9-pin)

Pin	Signal
Housing	Shield
1	NC
2	NC
3	B-Line
4	RTS*
5	GND BUS**
6	+5V BUS**
7	NC
8	A-Line
9	NC

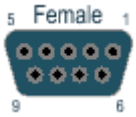

2.5.2. Termination Switch

A termination switch is provided on the Profibus-DP/Modbus Gateway to prevent signal reflection at the bus end. If the Gateway is the terminal end, set this switch to ON. If an external termination connector is used, set this switch to OFF.

Termination switch status	Meaning
ON	Bus termination is enabled.
OFF	Bus termination is disabled.

2.5.3. Address Setting Switch

The two rotary switches are used to set the node address as a decimal number of 1 to 99.

Name	Meaning
x 10 x 1	Set the address as a 2-digit decimal number.

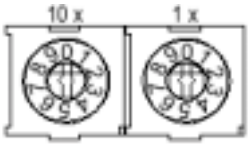

2.5.4. Profibus Communication Status LED

Name	Status	Meaning
RUN	Steady green light	Operating normally.
	Unlit	Not participating in the network, a timeout occurred, or the module power is cut off.
ERR	Steady red light	A CRC error was detected, or an invalid station number or baud rate is selected.
	Unlit	Operating normally, or the module power is cut off.
RD	Steady green light	Receiving data.
	Unlit	Not receiving data, or the module power is cut off.
SD	Steady green light	Sending data.
	Unlit	Not sending data, or the module power is cut off.

2.6. Teaching Device Connector [6]

A teaching pendant or the PC software is connected.

2.7. Power Input [7]

Symbol	Description
24V	Positive side of the 24-V power supply
N	Negative side of the 24-V power supply
S1, S2	Emergency-stop switch contacts: When the port is ON, these contacts open the emergency-stop switch line to the teaching pendant. When the port is OFF, S1 and S2 are shorted.

* Plug connectors (MC1.5/6-ST-3.81 by Phoenix Contact) are supplied.

3. Profibus Remote I/O Assignments

This section defines the mapping of Gateway remote I/Os on Profibus.
The assignments on Profibus are the same as those for the DeviceNet Gateway, but different from the assignments for the CC-Link Gateway.

3.1. Movement by Numerical Specification

An operation pattern in which target position, speed, acceleration/deceleration, push band and push rate are specified numerically to effect movement.
Each axis is expressed by 6 input bytes and 12 output bytes. The control mode and status of the Gateway itself are expressed by common I/O bytes (4 bytes each) irrespective of the movement pattern.
The I/O byte length is set by the mode setting switch.

3.1.1. Overall Configuration

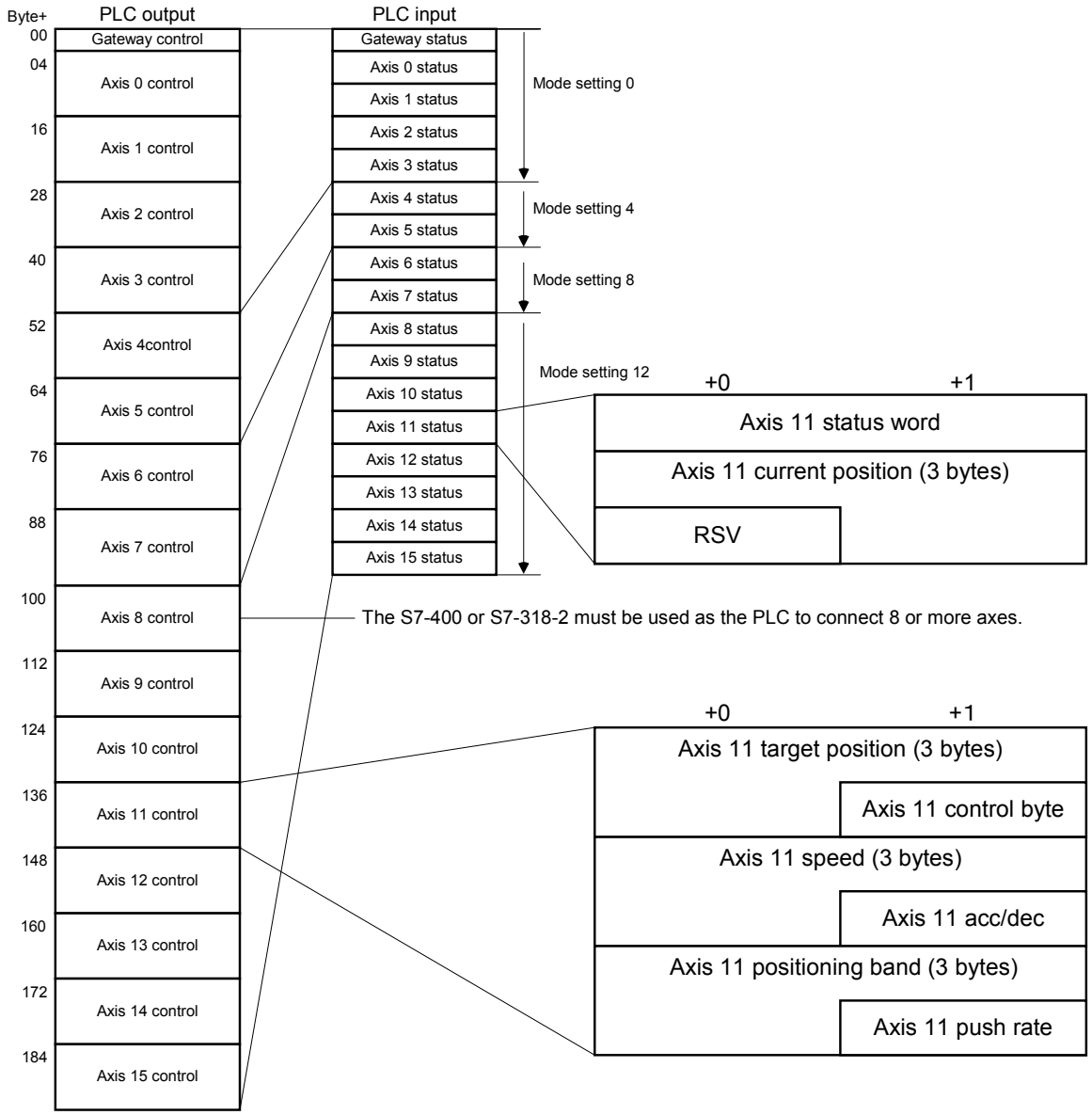

Fig. 6 Overview of Numerical Control

3.1.2. Remote I/O Assignments for Each Axis

Each axis consists of 6 output words and 3 input words, as shown below.

	07	06	05	04	03	02	01	00	Byte +
Target position									0
	SV								1
									2
Push rate	PPOW								3
Speed									4
	SPEED								5
									6
Acc/dec	ADCC								7
Positioning band									8
	INP								9
									10
Control byte	-	DIR	PUSH	SOn	Stp	Home	Cstr	AIRs	11

PLC output

Status word	Emg	PsfL	Crdy	Son	Move	Hend	Pend	Alm	0
	-	-	-	-	-	-	-	-	1
Current position									2
	PV								3
									4
	RSV								5

PLC input

Detail Explanation

	Bit	Name	Description
Target position	**07-00 x 3**	**SV**	Signed 24-bit integer (unit: 0.01 mm), maximum 0x0F423F
Push rate	**07-00**	**PPOW**	Power-limiting value in push-motion operation (00 to FFh: 0 to 100%)
Speed	**07-00 x 3**	**SPEED**	24-bit integer (unit: 0.01 mm/sec), maximum 0x0F423F
Acc/dec byte	**07-00**	**ADCC**	8-bit integer (unit: 0.01 G), maximum 200
Positioning band	**07-00 x 3**	**INP**	Signed 24-bit integer (unit: 0.01 mm), maximum 0x0F423F
Control byte	**07**	**-**	
	06	**DIR**	Push direction (0 = homing direction, 1 = opposite to homing direction)
	05	**PUSH**	Push-motion command
	04	**Son**	Servo on command

	03	**Stp**	Pause command
	02	**Home**	Homing command
	01	**Cstr**	Move command
Status word	**00**	**AlRs**	Alarm reset
	06	**PsfL**	No contact in push-motion operation
	05	**Crdy**	Controller ready
	04	**Son**	Servo status
	03	**Move**	Moving
	02	**Hend**	Home
	01	**Pend**	Movement complete
	00	**Alm**	Alarm indicating that operation cannot be continued
	07-00	**RSV**	Reserved
Current position	**07-00 x 3**	**PV**	Signed 24-bit integer (unit: 0.01 mm), maximum 0x0F423F
	07-00	**RSV**	Reserved

3.2. Movement by Position Number Specification

An operation pattern in which position numbers are specified to effect movement. Each axis is expressed by 2 input bytes and 2 output bytes. The contents of control/status bytes are the same as those under the “Movement by Numerical Specification” pattern. The control mode and status of the Gateway itself are expressed by common I/O bytes (4 bytes each) irrespective of the movement pattern.
The input length and output length are both fixed to 48 bytes.

3.2.1. Overall Configuration

PLC output

Byte	00	01
+00	Gateway control word 0	
02	Gateway control word 1	
04	Axis 0 control byte	Axis 0 POS specification
06	Axis 1 control byte	Axis 1 POS specification
08	Axis 2 control byte	Axis 2 POS specification
10	Axis 3 control byte	Axis 3 POS specification
12	Axis 4 control byte	Axis 4 POS specification
14	Axis 5 control byte	Axis 5 POS specification
16	Axis 6 control byte	Axis 6 POS specification
18	Axis 7 control byte	Axis 7 POS specification
20	Axis 8 control byte	Axis 8 POS specification
22	Axis 9 control byte	Axis 9 POS specification
24	Axis 10 control byte	Axis 10 POS specification
26	Axis 11 control byte	Axis 11 POS specification
28	Axis 12 control byte	Axis 12 POS specification
30	Axis 13 control byte	Axis 13 POS specification
32	Axis 14 control byte	Axis 14 POS specification
34	Axis 15 control byte	Axis 15 POS specification
36	RSV	RSV
38	RSV	RSV
40	RSV	RSV
42	RSV	RSV
44	RSV	RSV
46	RSV	RSV

PLC input

00	01
Gateway status word 0	
Gateway status word 1	
Axis 0 status byte	Axis 0 POS status
Axis 1 status byte	Axis 1 POS status
Axis 2 status byte	Axis 2 POS status
Axis 3 status byte	Axis 3 POS status
Axis 4 status byte	Axis 4 POS status
Axis 5 status byte	Axis 5 POS status
Axis 6 status byte	Axis 6 POS status
Axis 7 status byte	Axis 7 POS status
Axis 8 status byte	Axis 8 POS status
Axis 9 status byte	Axis 9 POS status
Axis 10 status byte	Axis 10 POS status
Axis 11 status byte	Axis 11 POS status
Axis 12 status byte	Axis 12 POS status
Axis 13 status byte	Axis 13 POS status
Axis 14 status byte	Axis 14 POS status
Axis 15 status byte	Axis 15 POS status
RSV	RSV
RSV	RSV
RSV	RSV
RSV	RSV
RSV	RSV
RSV	RSV

Fig. 7 Overall I/O Assignments for Movement by Position Number Specification

3.2.2. Remote I/O Assignments for Each Axis

Each axis consists of 2 input bytes and 2 output bytes, as shown below.

	07	06	05	04	03	02	01	00	Bytes+
Control byte	-	-	-	SOn	Stp	Home	Cstr	AlRs	**0**
Position number	-	-	PC32	PC16	PC8	PC4	PC2	PC1	**1**

PLC output

Status byte	Emg	-	Crdy	Son	Move	Hend	Pend	Alm	**0**
Position status	Z2	Z1	PM32	PM16	PM8	PM4	PM2	PM1	**1**

PLC input

Detail Explanation

	Bit	**Symbol**	**Description**
Control byte	07-00	-	Refer to the control byte for numerical specification.
Position number	05-00	PC32 ~ 1	Position number specification
Status byte	07-00	-	Refer to the status word for numerical specification.
Position status	07-06	Z1, 2	Zone 1, 2 output monitor
	05-00	PM32 ~ 1	Position status

3.3. Gateway Control/Status Word Assignments

These words are used to indicate the Modbus communication status as well as indicate the status of the Gateway itself and also control the Gateway.

C output

	07	06	05	04	03	02	01	00	Byte+
Control word 0	MON	-	-	-	-	-	-	-	0
	-	-	-	-	-	-	-	-	1
Control word 1	CFG15	CFG14	CFG13	CFG12	CFG11	CFG10	CFG9	CFG8	2
	CFG7	CFG6	CFG5	CFG4	CFG3	CFG2	CFG1	CFG0	3

C input

	07	06	05	04	03	02	01	00	
Status word 0	RUN	G.ER	T.ER	TPC	MOD				0
	Major Ver.			Minor Ver.					1
Status word 1	LNK15	LNK14	LNK13	LNK12	LNK11	LNK10	LNK 9	LNK8	2
	LNK7	LNK6	LNK5	LNK4	LNK3	LNK2	LNK1	LNK0	3

Gateway Control/Status Word Details

	Byte	Bit	**Name**	**Description**
Control word 0	+0	07	MON	Modbus communication start command
		06-00	-	Reserved
	1	07-00	-	Reserved
Control word 1	2-3	07-00	CFG#	Configuration definition of axis # When this bit is turned ON, T.ER will also turn ON when a communication error (no link) occurs with respect to the corresponding axis.
Status word 0	+0	07	RUN	The Gateway is normal (the same meaning as the LED).
		06	G.ER	The Gateway is abnormal (the same meaning as the LED).
		05	T.ER	Modbus communication error (the same meaning as the LED).
		04	TPC	TP port status
		03-00	MOD	Mode setting status
	1	07-00	-	Reserved
Status word 1	2-3	07-00	LNK#	Link status of axis #

3.4. Signal Timing Diagram

3.4.1. Overview

The timings of controller operation via the Gateway, as viewed from the PLC user application, are shown.
The figure below illustrates the composition of time after a specific control bit is turned ON in the PLC application program to execute axis operation, before a response is returned to the application.
Maximum response time = Profibus transmission delay + 2 x Mt + Response processing time
Refer to 4.2 for Mt (Modbus cycle time: ms).
Refer to the manual for your master PLC for the master → remote I/O station transmission delay (Yt) and the remote I/O station → master transmission delay (Xt).

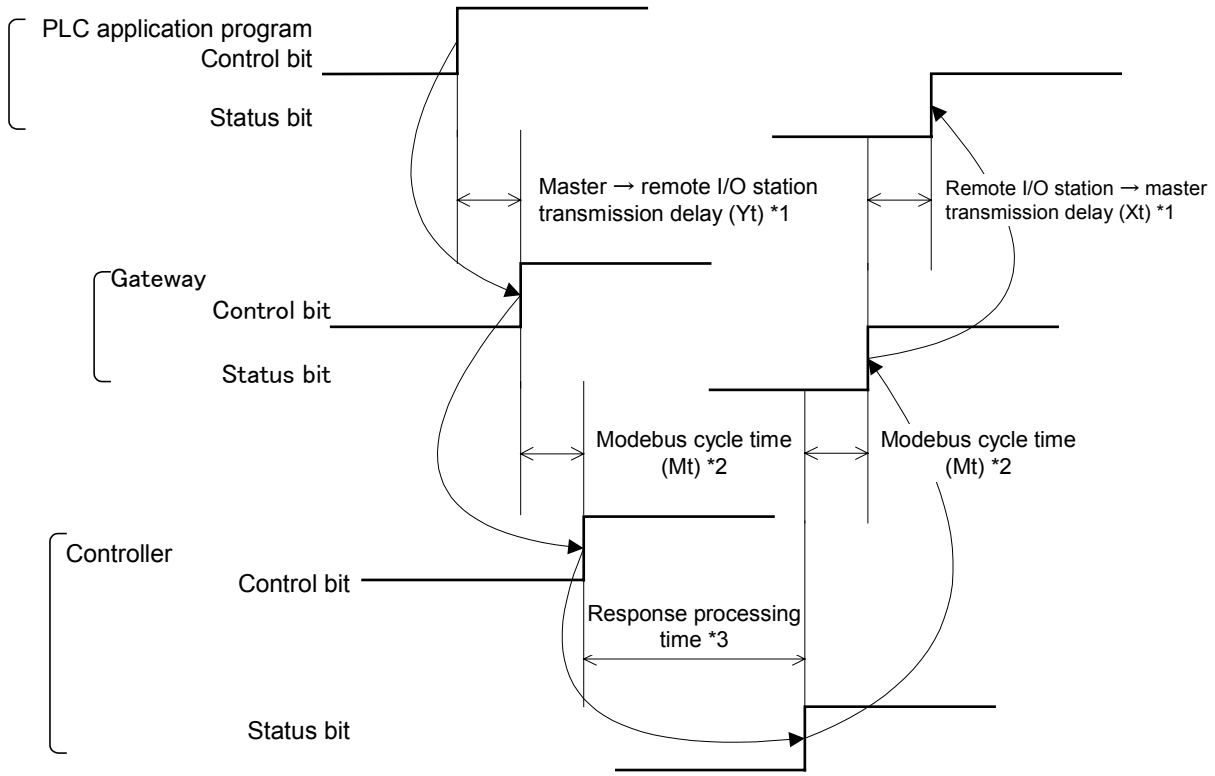

*1 Refer to the PLC manual.
*2 Varies according to the number of controllers connected.
*3 Varies according to the content of control.

Fig. 8 Response Time Composition

The timings of individual control functions are explained on the following pages.

3.4.2. Movement Data and Control Bits

The relationships of movement data (acceleration/deceleration, speed, target position, positioning band, push rate, position number) and control bits (Cstr, Push, Dir, Pend, Psfl, Move) are explained below.

A value is set in the setting field.
Cstr turns ON the moment [1] occurs or with a slight delay (≥ 0). Push and Dir turn ON, if necessary.
Pend (Psfl) turns OFF upon elapse of tdpf after Cstr turned ON.
Cstr (Push, Dir) remains ON and the target position is held until Pend (Psfl) turns OFF.
Move turns ON the moment Pend turns OFF or within 1Mt thereafter.
Pend (Psfl) turns ON the moment the target position is achieved and the current value is updated or within 1Mt thereafter.
Move turns OFF the moment Pend (Psfl) turns ON or within 1Mt thereafter.

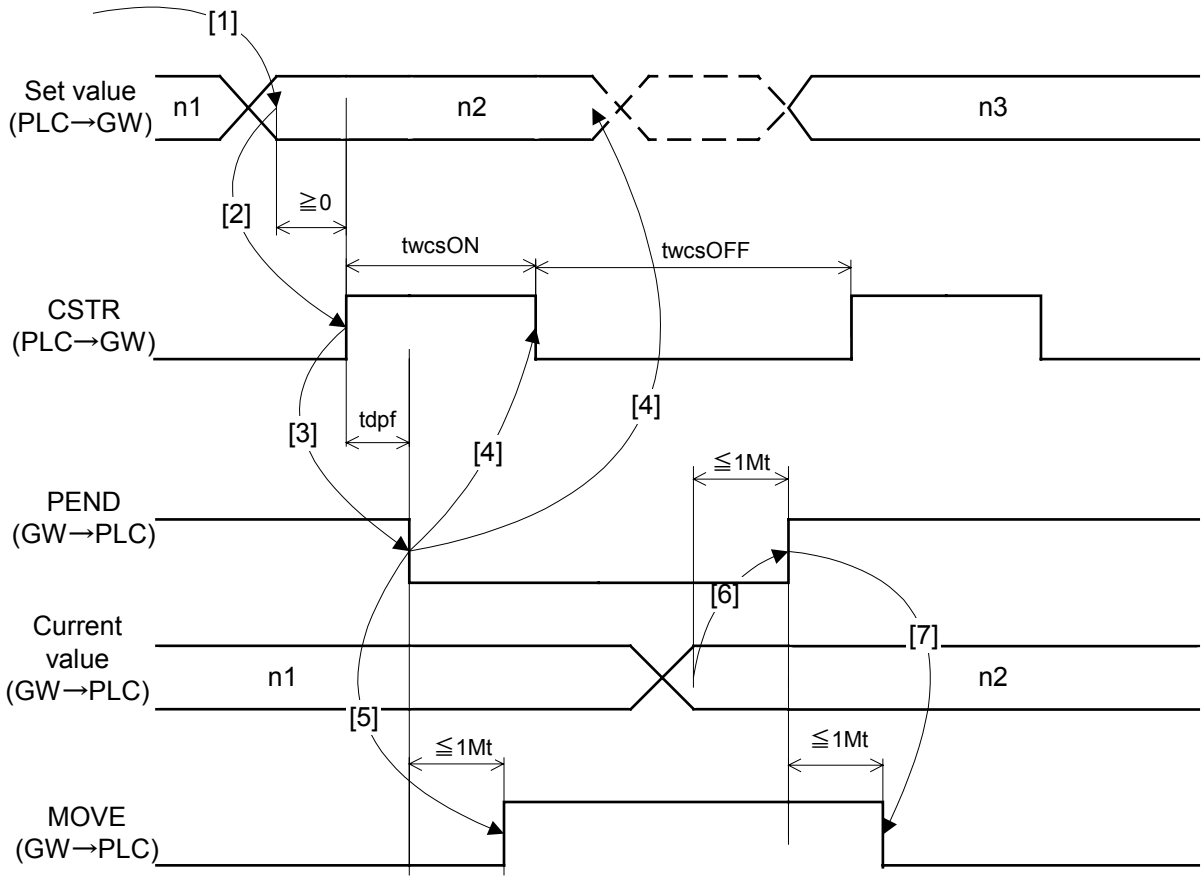

Fig. 9 Timing Chart of Direct Specification Word, Cstr, Pend and Move

Name	Minimum value (ms)	Maximum value (ms)	Overview
twcsON	1Mt		Minimum Cstr ON duration
twcsOFF	1Mt		Minimum Cstr OFF duration
tdpf	Yt+2Mt+Xt	Yt+2Mt+Xt+7	Cstr ON → Pend OFF delay

3.4.3. Pause (STP, MOVE)

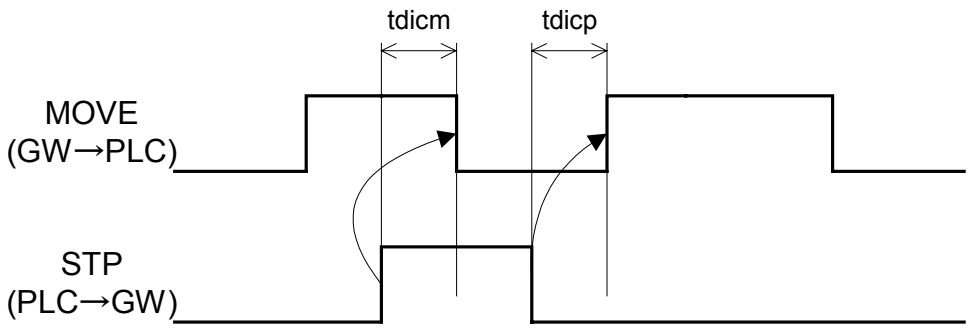

Fig. 10 Timing Chart of STP and Move

Name	Minimum value (ms)	Maximum value (ms)	Overview	Note
tdicm		*1	Stp ON → Move OFF delay	*1: Varies depending on the acceleration/deceleration.
tdicp		Yt+2Mt+Xt+6	Stp OFF → Move ON delay	

3.4.4. Servo On, Homing (SOn, Home)

SOn is activated upon level detection, while Home is activated upon leading edge detection.

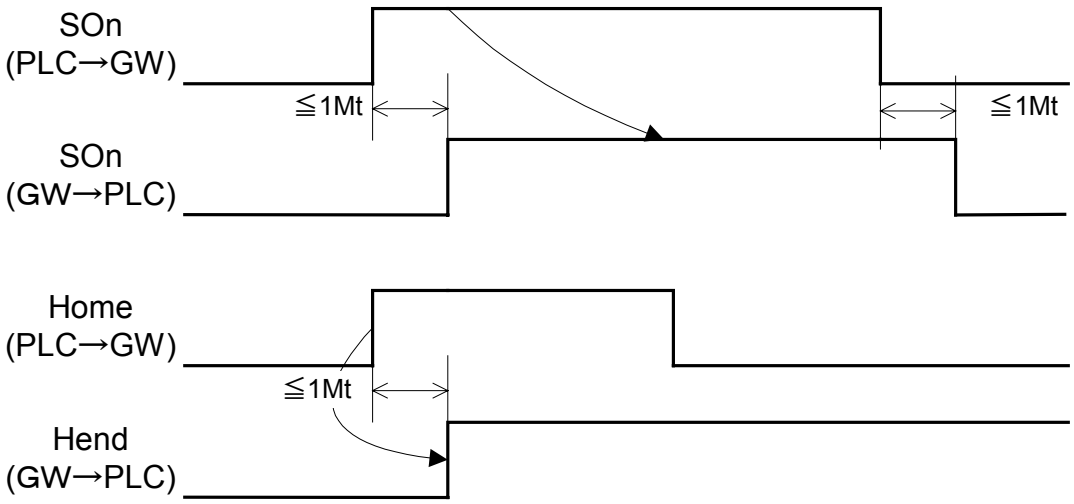

Fig. 11 Timing Chart of SOn and Home

4. Overview of Controller Communication (Modbus Communication)

4.1. Overview of Communication Procedure

Communication between the Gateway and controller on Modbus is divided into five phases as specified below:

[1] Link initialization phase

The Gateway will enter this phase when the master power is turned on, an alarm is reset or Profibus becomes online.

In this phase, the Gateway reads a type code from the controllers of axis numbers 0 to 15 and determines those returning a response as linked stations and those not responding as disconnected stations. The Gateway continues to implement PIO → Modbus control authority change with respect to the linked stations.

If Profibus is online and at least one station is linked and in MON state, the Gateway will transit to the next phase.

[2] Cyclical transmission phase

In this phase, the Gateway writes pre-mapped output data to all linked stations and reads input data from these stations. Stations not responding within the response monitoring time are considered disconnected. The input data for the disconnected stations remain the same as the last data, but the link status flag will turn OFF for these stations.

[3] DPRAM refresh phase

The Gateway exchanges data with the DPRAM in the Anybus Profibus module. If MON is OFF, the Gateway will transit to phase [1].

[4] Slave addition phase

The Gateway reads an index table from one disconnected station (if any) per cycle, and invites the disconnected stations to return to the link and adds them to the link. The Gateway continues to implement PIO → Modbus control authority change with respect to the linked stations.

In a normal state, [2], [3] and [4] are repeated.

[5] End phase

The Gateway will transit to this phase when Profibus becomes offline. The Gateway stops each axis (a servo off command is issued continuously for one cycle).

4.2. Communication Performance

The communication performance of the Gateway is specified below. **The nominal cycle time is set to 10 ms x (n+1)** (n = number of axes) in consideration of unknown factors that may be encountered in the future. As described above, the Gateway and controller repeat a cycle consisting of [2], [3] and [4]. Process [3] occurs during the frame identification idle period.

As illustrated below, the Gateway's communication performance is as approx. 8 ms in cycle time when transmitting to/from one axis, which increases to 128 ms in a 16-axis configuration assuming no disconnected stations (both are measured values). If the number of axes is 16 or less and axis configuration is not defined, an invitation process (approx. 10 ms) must be added per axis per cycle. Given n numbers of axes, the actual cycle time is therefore calculated as 8 x n +10 (ms). If an axis configuration is defined and no transmission error occurs, the cycle time becomes 8 x n (ms).

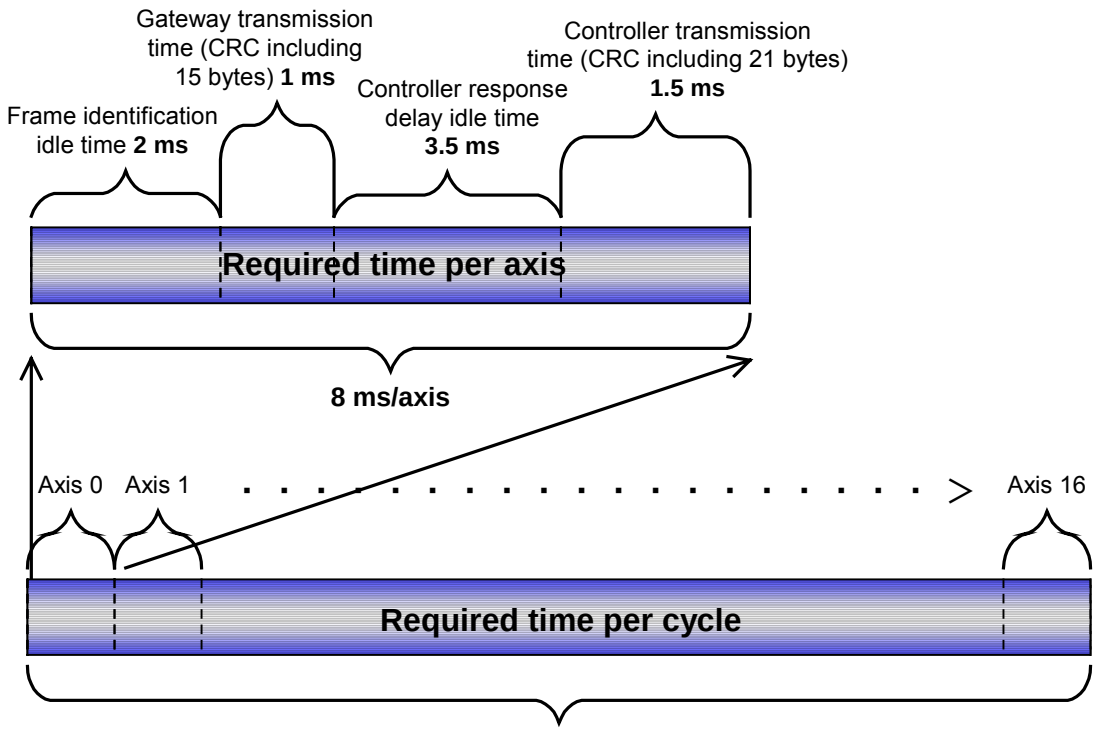

Fig. 12 Communication Time Per Axis and Per Cycle

5. System Building Procedure

The following settings are required for a PLC to communicate with a single-axis controller via a Gateway:

- Controller settings for enabling Modbus communication between the Gateway and controller
- PLC and Gateway settings for enabling Profibus communication between the PLC and Gateway

5.1. Settings for Controller Communication

For the Gateway to communicate with the single-axis controller, the following three settings are required:

- Set a unique axis number in a range of 0 to 15.
- Set the user parameter “SIO communication speed” to “230400” (230.40 kbps).
- Set the user parameter “Slave transmitter activation minimum delay” to “2” or more.

A setting example of the user parameter setting screen of the PC software (Modbus communication version) is given below.

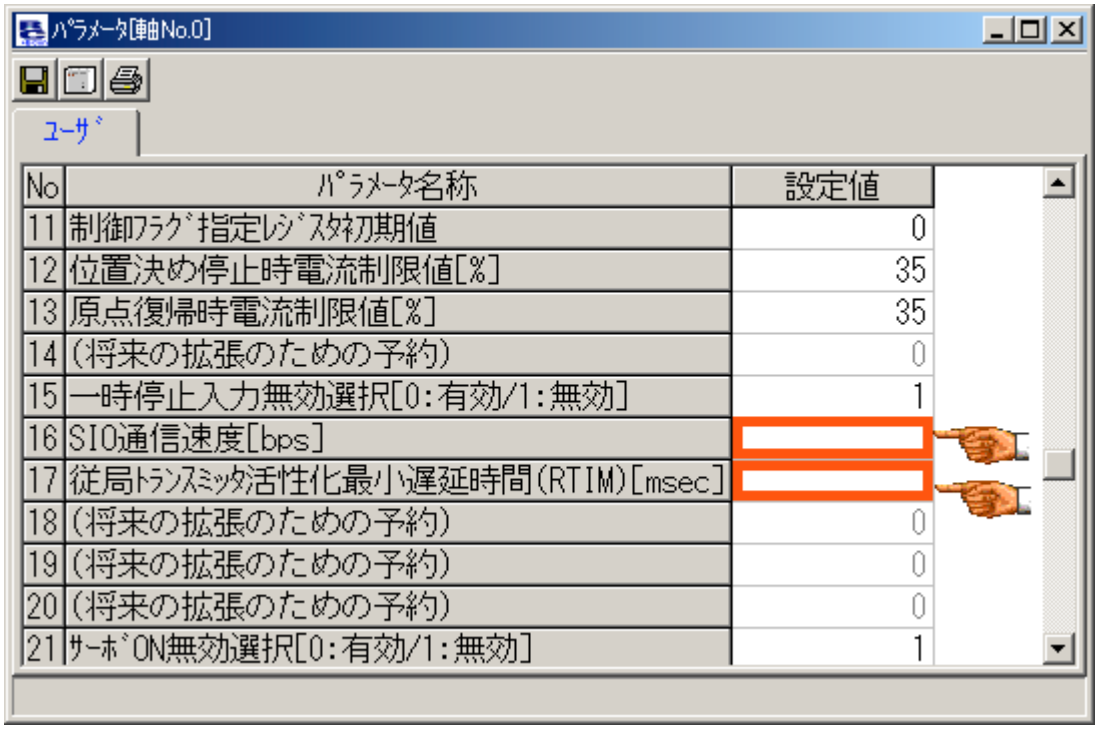

No	ﾊﾟﾗﾒｰﾀ名称	設定値
11	制御ﾌﾗｸﾞ指定ﾚｼﾞｽﾀ初期値	0
12	位置決め停止時電流制限値[%]	35
13	原点復帰時電流制限値[%]	35
14	(将来の拡張のための予約)	0
15	一時停止入力無効選択[0:有効/1:無効]	1
16	SIO通信速度[bps]	
17	従局ﾄﾗﾝｽﾐｯﾀ活性化最小遅延時間(RTIM)[msec]	
18	(将来の拡張のための予約)	0
19	(将来の拡張のための予約)	0
20	(将来の拡張のための予約)	0
21	ｻｰﾎﾞON無効選択[0:有効/1:無効]	1

Fig. 13 Setting Example of PC Software’s User Parameter Setting Screen

Reference: Communication speed cannot be set automatically. This is because the master/slave alignment of communication speed is initiated by the master using a break signal (a space of 200 ms or more is sent, thereby effectively interrupting the transmission) and it will also interrupt the normal communication with other slaves.

5.2. Settings for Profibus-DP Communication

The following three items must be consistent between the Gateway and the PLC (Profibus settings).

Table 1 Setting Correspondence Table

	Gateway				PLC		
1	Address switch setting				Profibus unit address		
2	There are no settings corresponding to the items shown at right.				Unit type ⇒ Universal module*1		
					IO TYPE ⇒ Out- input		
3	Mode setting switch 1				I/O length		
	4	**3**	**2**	**1**	Output Length (Byte)	Input Length (Byte)	
	○	○	○	○	52	28	Direct specification, 4 axes
	○	●	○	○	76	40	Direct specification, 6 axes
	●	○	○	○	100	52	Direct specification, 8 axes
	●	●	○	●	124	64	Direct specification, 10 axes
	●	●	○	○	196	100	Direct specification, 16 axes*2
	○	○	●	○	48	48	POS specification, 16 axes

*1 Multiple modules, each consisting of m/n input/output bytes, may be set without space between the I/O addresses. If FB/FCs are to be used, the head address numbers must be continuous and the same between input and output sides.

*2 The S7-400 or S7-318-2 must be used as the PLC to connect 10 or more axes.
Sample Profibus settings based on Siemens' STEP 7 are shown below.
For details, refer to the manual for the applicable tool.

5.2.1. Importing a GDS File in STEP 7's Hardware Configuration Screen

To define the Gateway in STEP 7's HW Config screen, the Gateway's GDS file must be imported. The GDS file to be imported is HMS_1003.GDS. This file can be downloaded from IAI's web page.

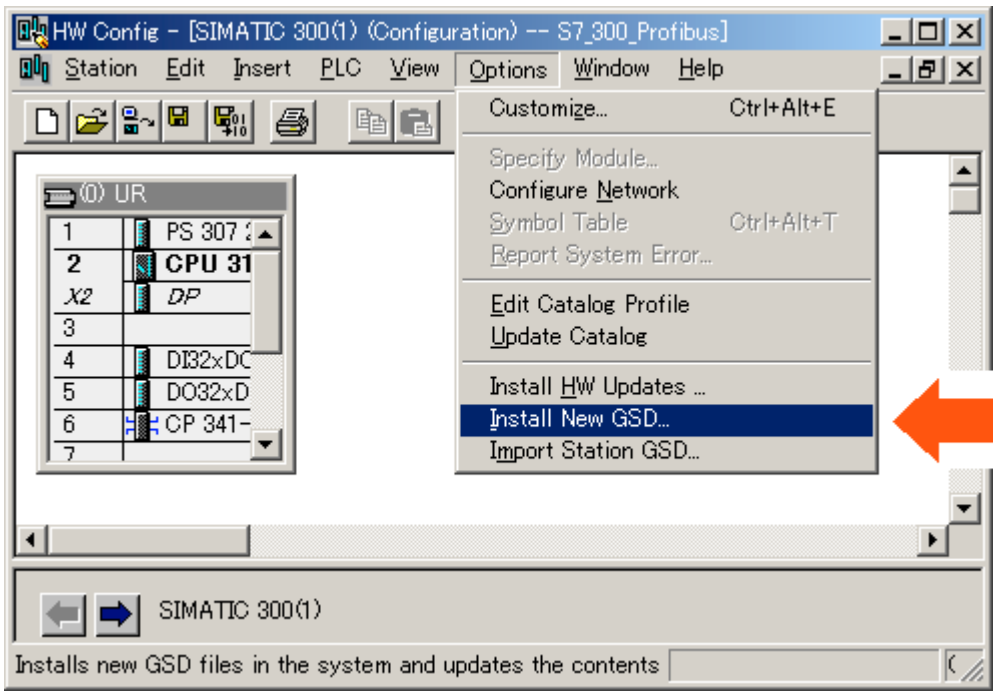

Fig. 14 GDS File Import

When the GDS file has been imported successfully, a new level called "ANYBUS-PDP" will be created in the catalog window of the HW Config screen.

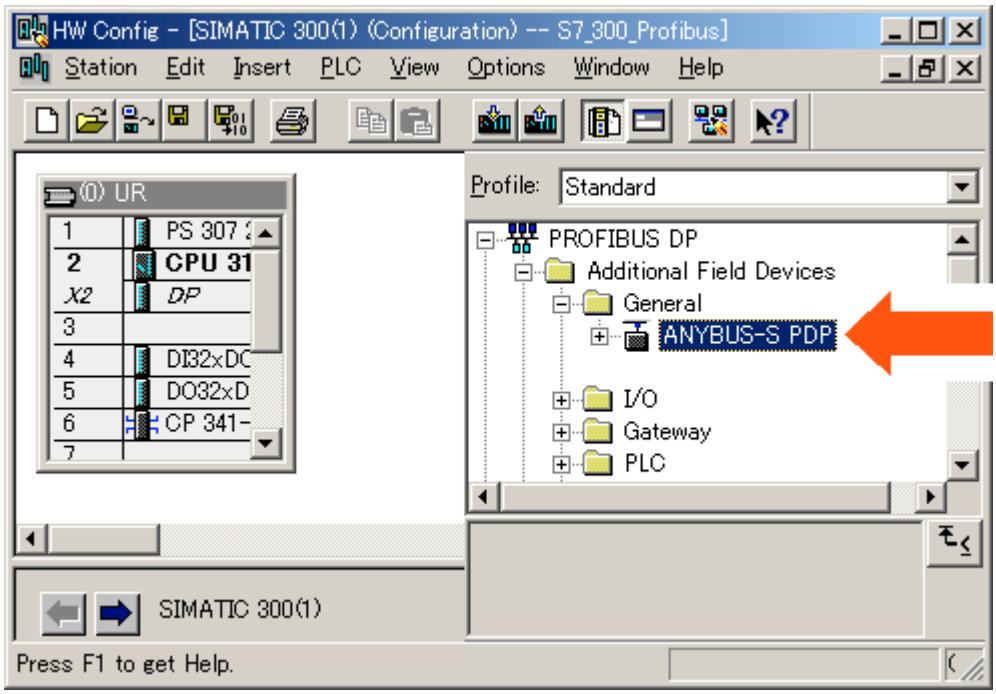

Fig. 15 Catalog Window after GDS File Import

5.2.2. Inserting a Profibus-DP Master System

Select a Profibus-DP master and insert it as the master system, as shown below.

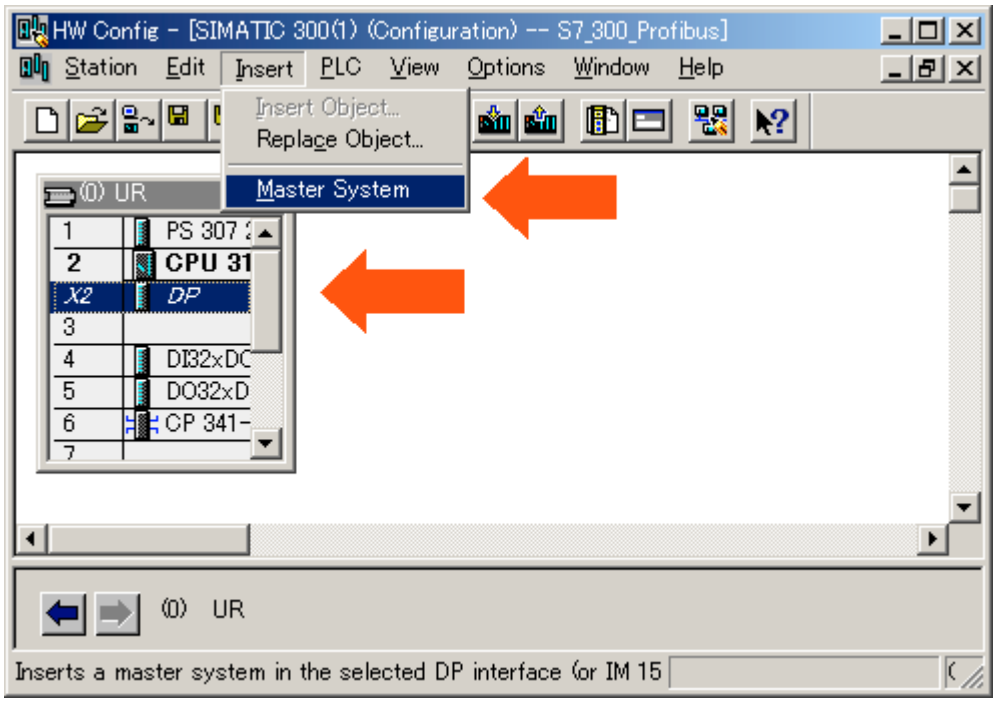

Fig. 16 Master System Insertion

When the Profibus-DP master has been inserted successfully, it will be displayed as the master system, as shown below.

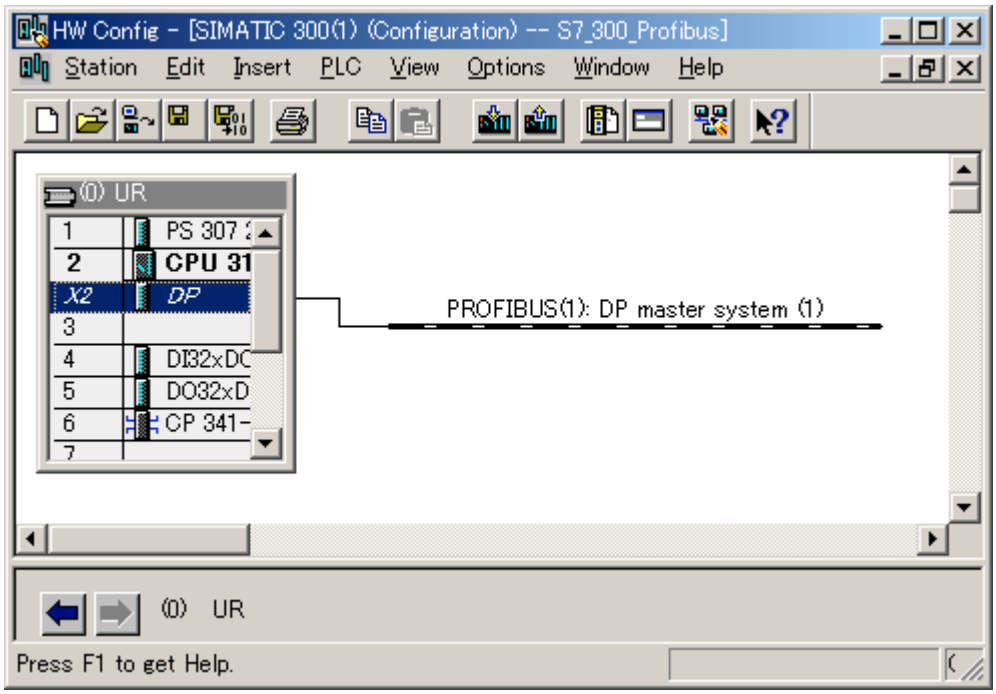

Fig. 17 Inserted Profibus-DP Master System

5.2.3. Inserting a Gateway Rack in the Network

Drag and drop “ANYBUS-S PDP” in the catalog window over to the master system and insert it as a module, as shown below.
The address will be set automatically. To change the address that has been set automatically, do so in the Properties dialog box. This address must correspond to the address switch setting of the Gateway, as mentioned earlier.

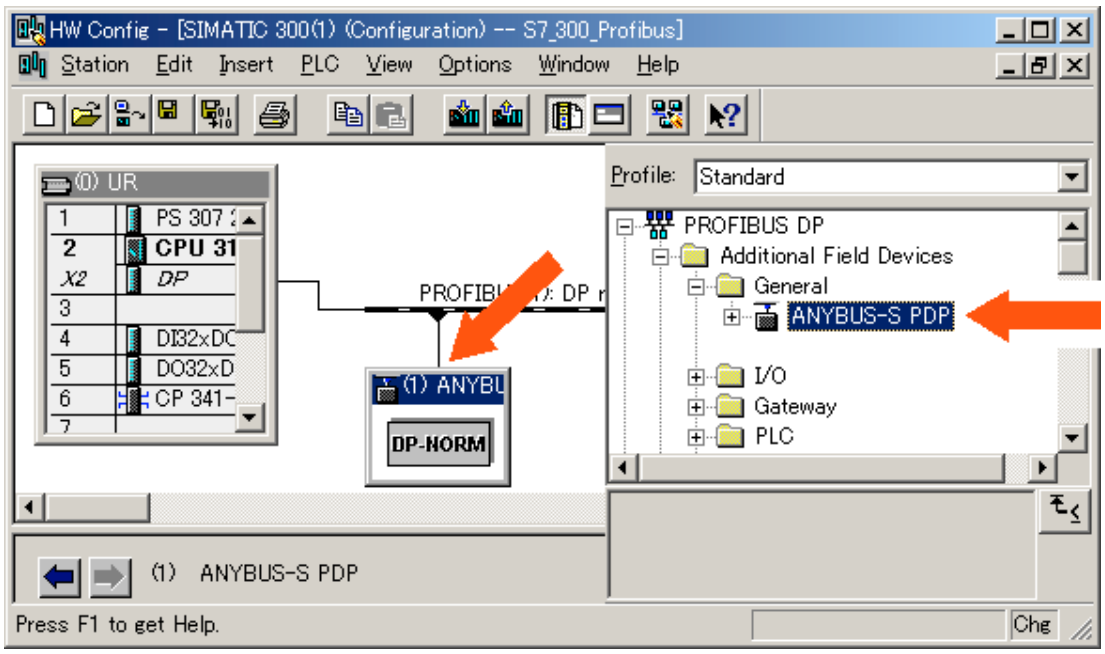

Fig. 18 Insertion of Rack into Network

5.2.4. Setting the I/O Assignments – Inserting a Universal Module

Insert a universal module into the rack inserted in the previous step, as shown below. Since the maximum input/output bytes of the universal module are 64 each, another universal module must be inserted if there are 10 or more axes.

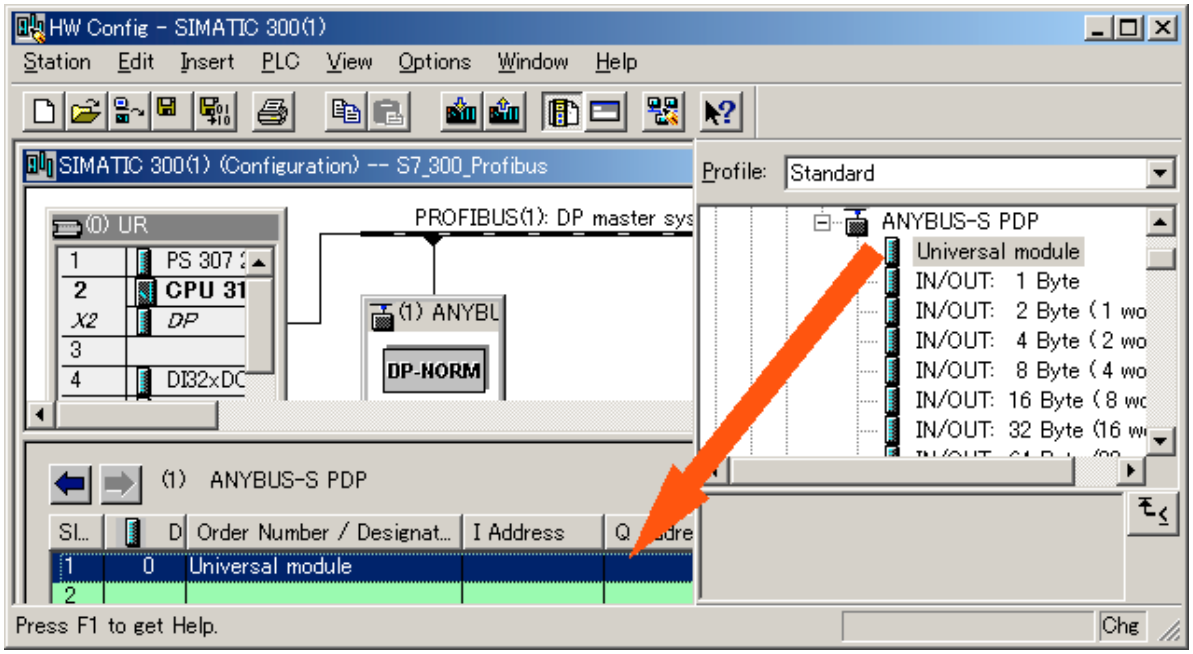

Fig. 19 Insertion of Universal Module into Rack

Double-clicking the inserted universal module will open the Properties dialog box shown below.

Set “I/O Type” to “Out-input,” and then enter the output length and input length according to Table 1, “Setting Correspondence Table.” The example below assumes connection of four axes. The address will be set automatically, but it can be changed if necessary.

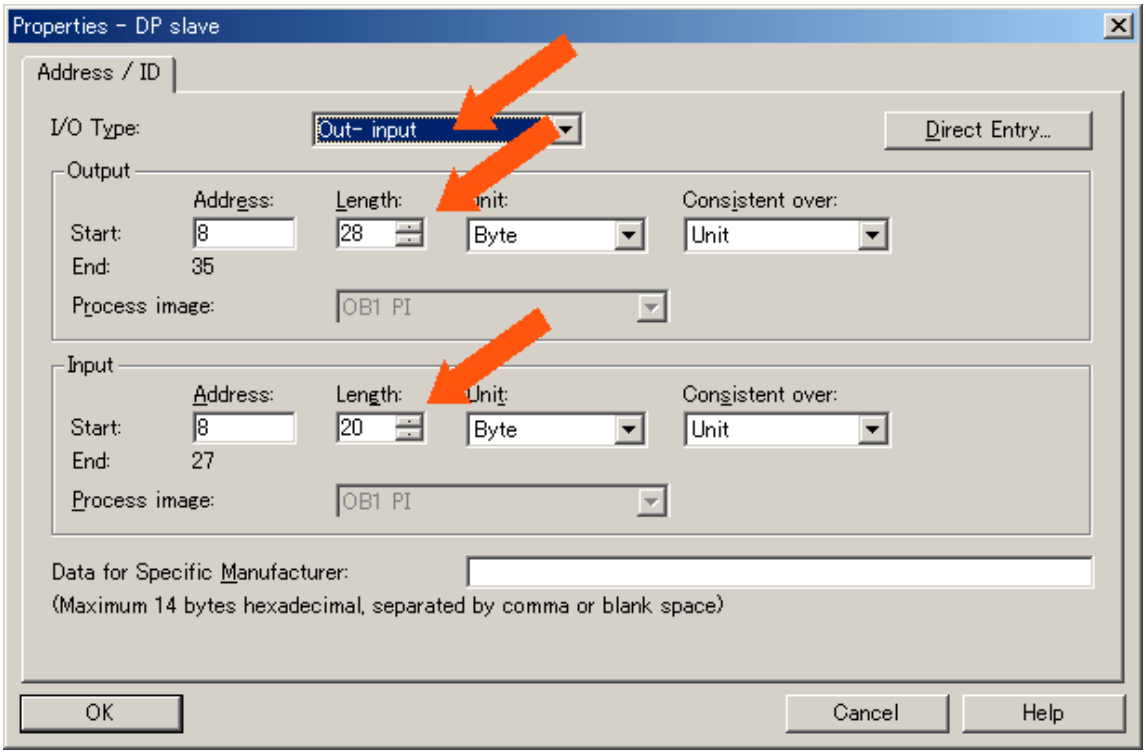

Fig. 20 I/O Length Settings for Universal Module

Clicking **OK** will apply the settings to the universal module, as shown below.

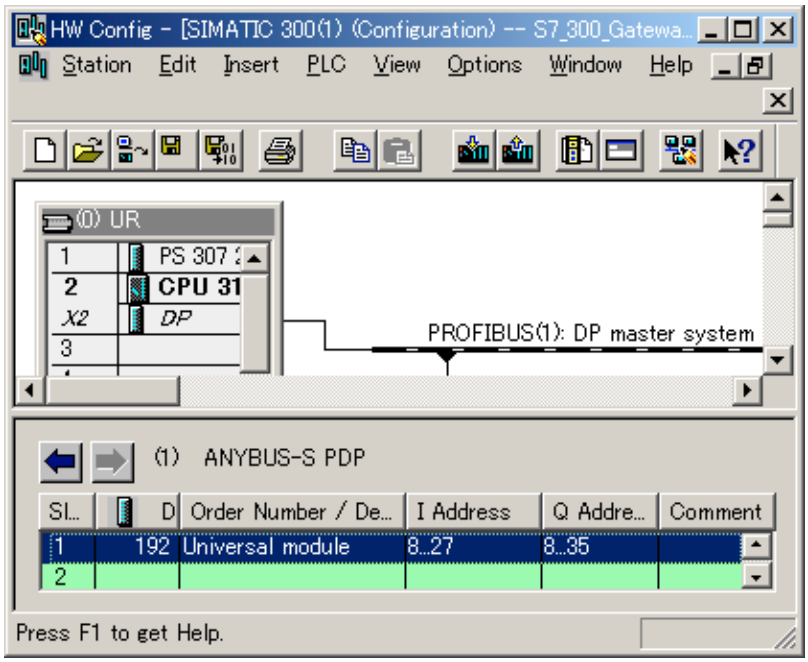

Fig. 21 Universal Module with I/O Lengths Set

All settings are now complete. You can now download them to the PLC.

5.2.5. Example of Actual Assignments

After completing the I/O assignments in the preceding sections with the mode setting switch set to a 4-axis, numerical specification mode, the actual addresses should look like those shown below.

	+00	+01
QW08	Gateway control word 0	
10	Gateway control word 1	
12	Axis 0 target position	
14		Axis 0 push rate
16	Axis 0 speed	
18		Axis 0 acc/dec
20	Axis 0 positioning band	
22		Axis 0 control byte
24	Axis 1 target position	
26		Axis 1 push rate
28	Axis 1 speed	
30		Axis 1 acc/dec
32	Axis 1 positioning band	
34		Axis 1 control byte
36	Axis 2 target position	
38		Axis 2 push rate
40	Axis 2 speed	
42		Axis 2 acc/dec
44	Axis 2 positioning band	
46		Axis 2 control byte
48	Axis 3 target position	
50		Axis 3 push rate
52	Axis 3 speed	
54		Axis 3 acc/dec
56	Axis 3 positioning band	
58		Axis 3 control byte

	+00	+01
IW08	Gateway status word 0	
10	Gateway status word 1	
12	Axis 0 status byte	RSV
14	Axis 0 current position	
16		
18	Axis 1 status byte	RSV
20	Axis 1 current position	
22		
24	Axis 2 status byte	RSV
26	Axis 2 current position	
28		
30	Axis 3 status byte	RSV
32	Axis 3 current position	
34		

Based on the above, the control bits, status bits, directly specified values and current value of axis 03, for example, are addressed as shown in the table below.

Output signal/Data name	Address	Data length	Input signal/Data name	Address	Data length
Target position	QB48 ~ 50	3 bytes	Emg	I 30.7	Bit
Push rate	QB51	Byte	PSFL	I 30.6	Bit
Speed	QB52 ~ 54	3 bytes	Crdy	I 30.5	Bit
Acc/dec	QB55	Byte	Son	I 30.4	Bit
Positioning band	QB56 ~ 58	3 bytes	Move	I 30.3	Bit
—	Q 51.7	Bit	Hend	I 30.2	Bit
Dir	Q 51.6	Bit	Pend	I 30.1	Bit
Push	Q 51.5	Bit	Alm	I 30.0	Bit
Son	Q 51.4	Bit	Current position	IB32 ~ 34	3 bites
Stp	Q 51.3	Bit			
Home	Q 51.2	Bit			
Cstr	Q 51.1	Bit			
AIRs	Q 51.0	Bit			

The S7-300 guarantees consistency of I/O image and data at the data width (byte, word or double words) defined in the program. If data consistency must be guaranteed throughout the I/O areas, one way is to copy/write the I/O areas to the memory area (M area) using SFC14 and SFC15, and then specify the M area in the program.
For details on this method, refer to the applicable document published by HMS:
http://www.anybus.com/eng/upload/AnyBus-S-0012-Siemens Step7 and AnyBus-S.pdf.

5.3. Function Block/Function (FB/FC) Support for S7

The function blocks/functions provided by IAI allow for easy programming without the need to worry about detailed I/O assignments. The basic functions provided include this addressing function and a range check function for certain input parameters.
These function blocks/functions can be utilized only with the Siemens S7 Series. Short sample programs are provided in Appendix 3 for reference.

The following two types are supported.

Name	Overview
GW_CTL	Start/stop communication between the Gateway and controller, and specify link axes.
RC_NVC	Execute movement by numerical specification.

5.3.1. FC GW_CTL

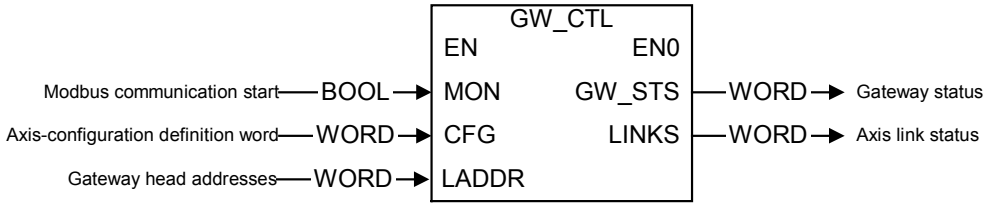

Explanation:

This is a function to access Gateway control/status words.
Before calling RC_CTL, communication between the Gateway and controller must be started using this function.
If necessary, axis configuration must also be defined.
In LADDR, the Gateway I/O head addresses set in HW Config are set. (The head address numbers must be continuous and the same between input and output sides. Refer to 5.2, “Settings for Profibus-DP Communication.”)

Parameters:

I/O	Parameter name	Data type	Description
Input	MON	BOOL	Start of communication between the Gateway and controller
	CFG	WORD	Specify the axis to be configured using a bit pattern (bit 0 = axis 0, bit 15 = axis 15).
	LADDR	WORD	Gateway head I/O addresses
Output	GW_STS	WORD	Gateway status word 0 is output.
	LNK2	WORD	Gateway status word 1 is output.

5.3.2. FB RC_NVC

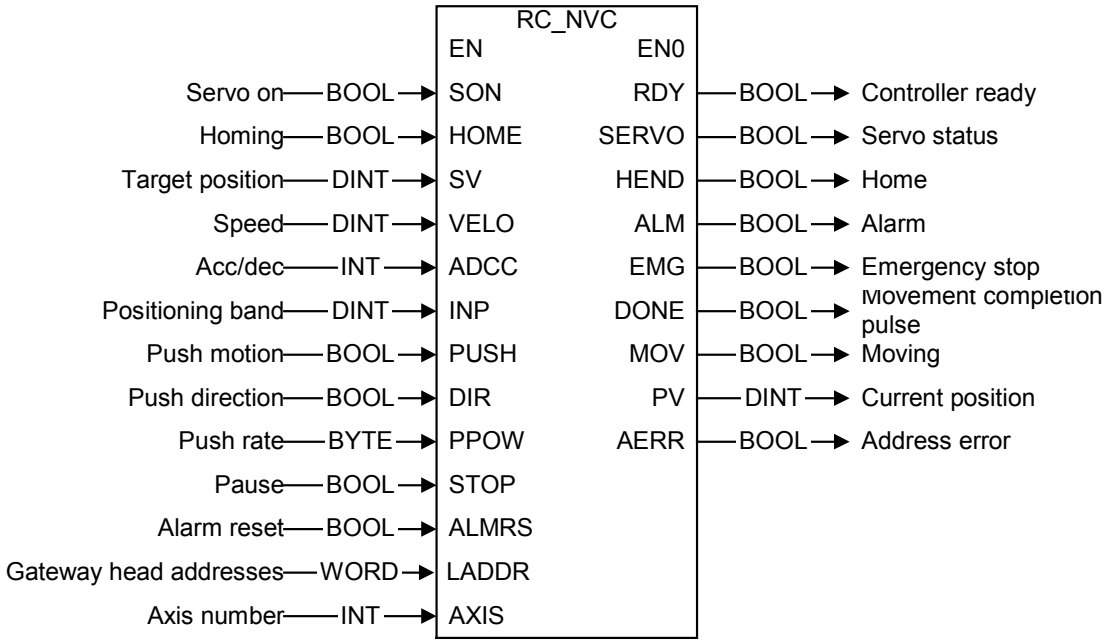

Explanation:

For details on I/O parameters, refer to 3, "Profibus Remote I/O Assignments."
In LADDR, the Gateway I/O head addresses set in HW Config are set. (The head address numbers must be continuous and the same between input and output sides. Refer to 5.2, "Settings for Profibus-DP Communication.")
When MREQ turns ON, SV, VELO, ADCC, INP and PPOW are transferred from the Gateway to the controller and executed. Other parameters are always enabled when called. For example, even when MREQ is OFF, issuing a FB call when HOME is ON will change the output parameters according to the homing operation.

Parameters:

I/O	Parameter name	Data type	Description
Input	MREQ	BOOL	Move request upon FALSE → TRUE
	SON	BOOL	Servo on command
	HOME	BOOL	Homing command
	SV	DINT	Target position (set value)
	SPEED	DINT	Speed
	ADCC	INT	Acceleration/deceleration
	INP	DINT	Positioning band (push band if PUSH is ON)
	PUSH	BOOL	Push mode when TRUE
	DIR	BOOL	Push direction (0 = homing direction, 1 = opposite to homing direction)
	PPOW	WORD	Push rate (enabled when PUSH is ON)
	STOP	BOOL	Pause command
	ALMRS	BOOL	Alarm reset command
	LADDR	INT	Gateway head I/O addresses
	AXIS	INT	Axis number (0 to 15)
Output	RDY	BOOL	Controller ready
	SERVO	BOOL	Servo status
	HEND	BOOL	Home
	ALM	BOOL	Alarm
	EMG	BOOL	Emergency stop
	DONE	BOOL	1 pulse is output when moving is complete (leading edge of Pend or Psfl).
	MOVE	BOOL	Moving when TRUE
	PV	DINT	Current position (processed value)
	AERR	WORD	AXIS exceeds 15 or is a negative value, or LADDR is a negative value.

6. Firmware Updating Procedure

The Gateway can be started in the updating mode by switching all 4 bits of the mode setting switch to ON.
The Gateway firmware can be updated using the updating tool provided by IAI.
The following procedure is based on V1.00.02.03-J of the updating tool. For details, refer to the manual for the updating tool.
To write the firmware to the PCB that has never been written before, write the onboard flash memory using YDC's NetImpress.

Updating Procedure

1. Turn off the Gateway power.
2. Turn all bits of the mode setting switch to ON (record the initial switch bit settings).
3. Connect the Gateway's TP port and the PC by following the same procedure for connecting PC software.
4. Turn on the Gateway power. The Gateway will start in the updating mode (the RUN LED will blink at 1-Hz frequency).
5. Start the updating tool provided by IAI.
6. Set "Target" to "RCP2/ERC Controller Application."
7. Set "COM Port" to the actual COM port used in the updating session.
8. Set "Baud Rate" to "115,200 bps."
9. Click **File (F)**, and then select **Open (O)**. When the Open File dialog box is displayed, select "Update Data File (*.mhx)" under Type of files (T), and then select the Motorola file with which to update the firmware.
10. Transfer the file.
11. When the transfer is complete, the RUN LED will stop blinking and a steady light will come on.
12. Turn off the power.
13. Reset the mode setting switch to the initial bit settings.

Appendix 1. Resetting Controller Alarms

The table below lists the causes of alarms that may generate in the RCP2/ERC controller, alarm codes (can be checked using the PC software or TP), and whether or not each alarm can be reset by issuing a reset command via the Gateway.
Even when an alarm is reset, it will come on again if the cause of the alarm is not removed.
The controller specification is subject to revision. Please refer to the manual for your controller.

Cause of alarm	Code	Resetting
A move command was issued when the servo was off.	03	○
A homing command was issued when homing was disabled.	03	○
A position command was issued when home was not yet established.	03	○
An absolute position move command was issued when home was not yet established.	03	○
A move command was issued during homing.	03	○
Data error during parameter execution	06	○
Data error during position data execution	06	○
Data error during position command information execution	06	○
Excitation detection error	07	x
No home sensor detection	07	○
Homing timeout	07	○
Excessive actual speed	08	○
Servo error	08	○
Overvoltage	09	○
Overheat	09	○
Abnormal control power-supply voltage	09	○
Low control power-supply voltage	09	○
Deviation overflow	0B	○
Phases A/B open	0D	x
Phase A open	0D	x
Phase B open	0D	x
Absolute encoder error detection 1	0D	○
Absolute encoder error detection 2	0D	○
Absolute encoder error detection 3	0D	○
PCB inconsistency error	04	x
Non-volatile memory rewrite limit over	05	○
Non-volatile memory write timeout	05	○
Non-volatile memory write error	05	○
Non-volatile memory data damage	0F	○
CPU error	0E	x
FPGA error	0E	○

○ --- Can be reset, x --- Cannot be reset

Appendix 2. Direct Connection of the Modbus Master and Controller

As shown below, the Modbus master driver software can be downloaded to the CP341 communication module in the Siemens S7-300 series to enable direct connection with the RCP2/ERC controller (without going through the Gateway).
Based on the maximum communication speed, overhead in the intermediate processing on the PLC side and other limitations, IAI estimates the communication performance of this configuration to be 100 ms/axis, which is significantly slower than when the Gateway is used.
For details, refer to the manual for the aforementioned Siemens product as well as IAI's Modbus Communication Specification available to the users.

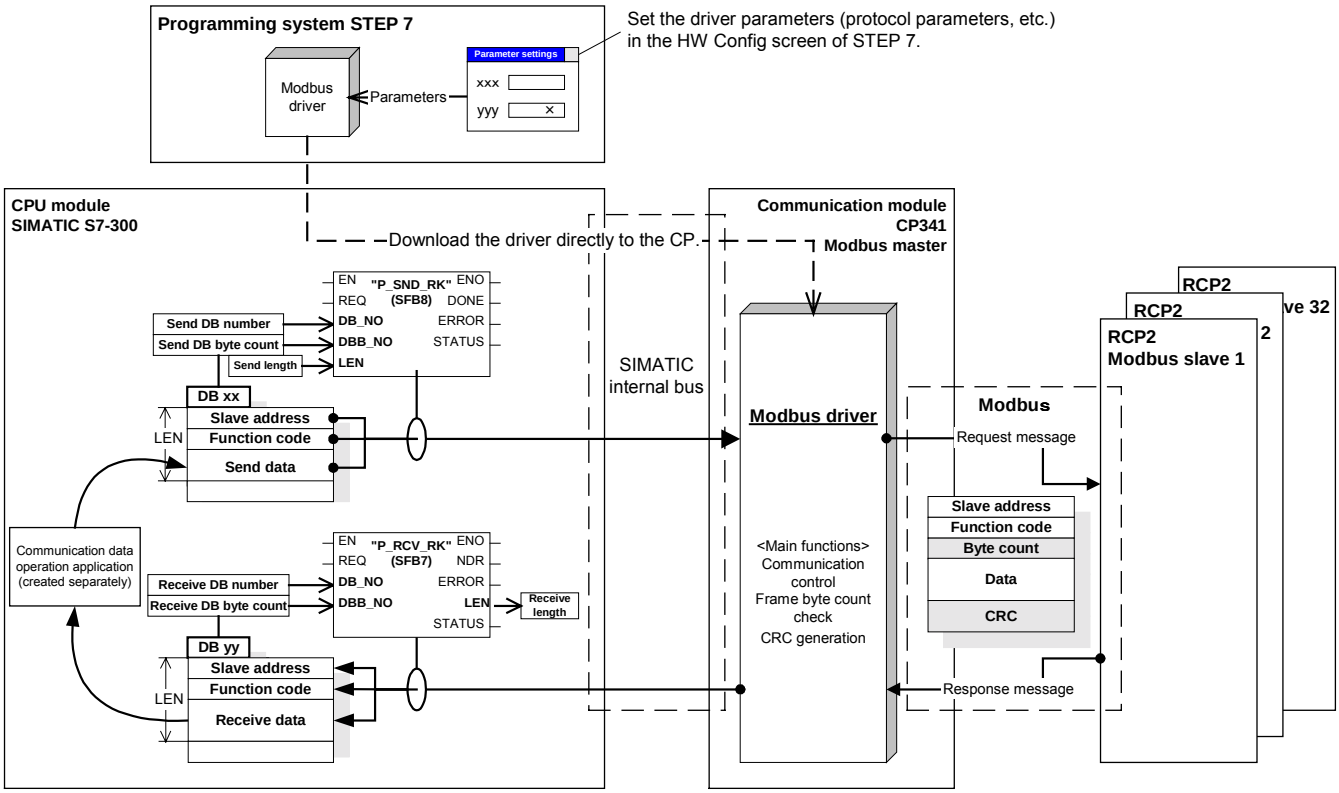

A number of PC-based Modbus communication freeware and shareware are also available (visit Modbus-IDA's web site: http://www.modbus.org/default.htm). A system that uses a PC as the master controller can be configured with relative ease by using such freeware/shareware.

Appendix 3. Sample Programs for S7-300

Example of Using RC_NVC and GW_CTL

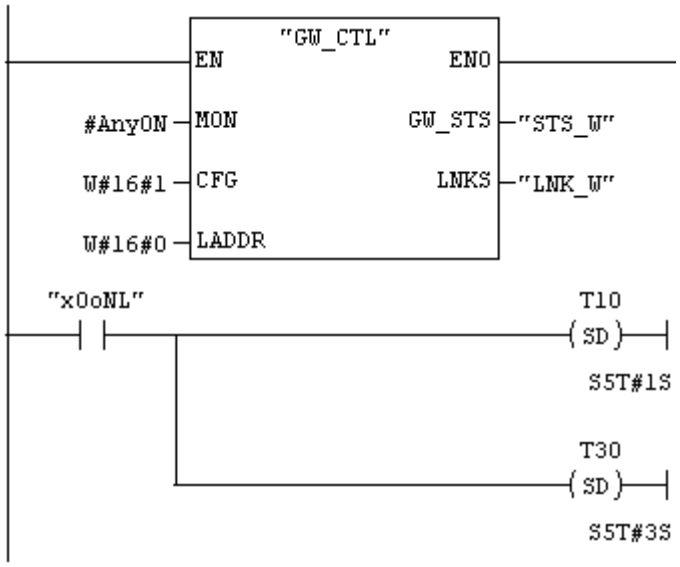

#AnyON is always ON.

GW/controller communication starts (MON).

Axis 0 is configured (W#16#1).

The Gateway I/O head addresses are “0.”

Servo on delay timer

Homing delay timer

The next target position is controlled based on the movement completion pulse (NC0.DONE) output by a FB.
The target position changes in the sequence of x0p1 → x0p2 → x0p3 → x0p1, …, every time the NC0.DONE pulse is input.

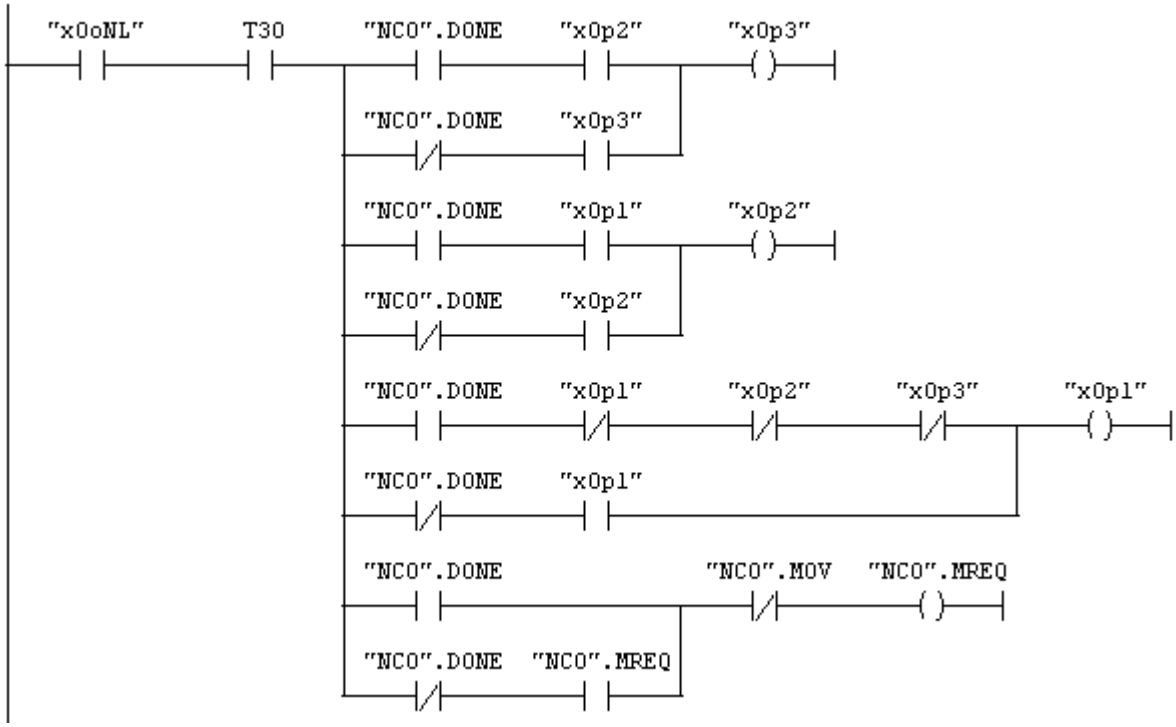

Online status is checked from the STS_W, LNK_W and RC_NVC (instance name: NC0) outputs.

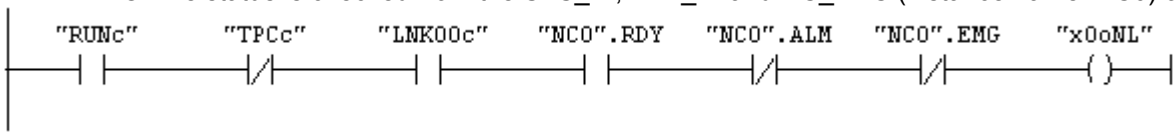

Step1 movement data set (push motion)

Target position: 30.00 mm Speed: 100.00 mm/s

Acceleration/deceleration: 0.2 Push band: 20.00 mm Push rate: 49% (7F / FF)

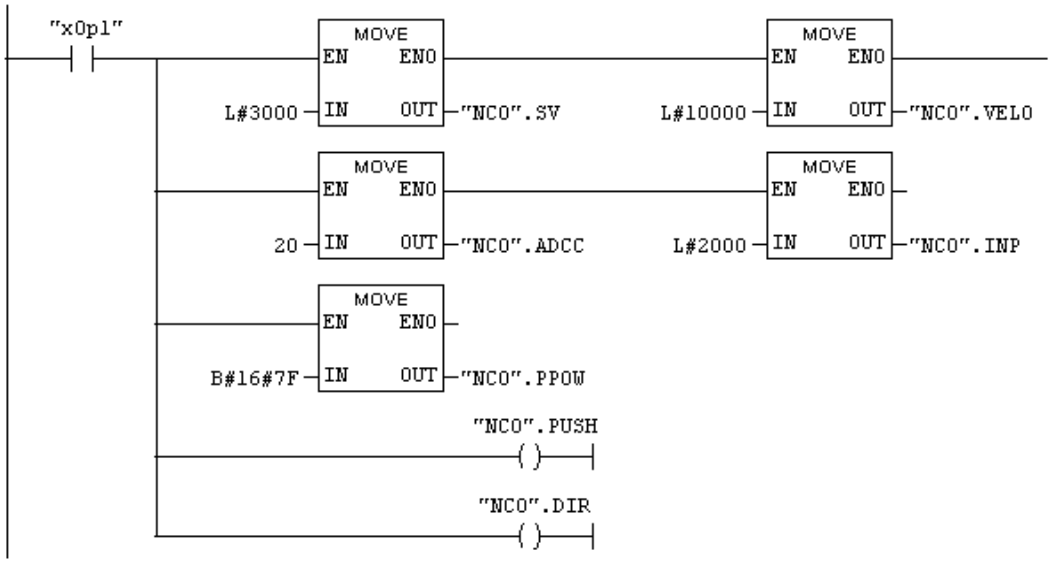

Step2 movement data set (normal movement)

Target position: 20.00mm Speed: 100.00 mm/s

Acceleration/deceleration: 0.2 Positioning band: 00.10 mm Push rate: 0%

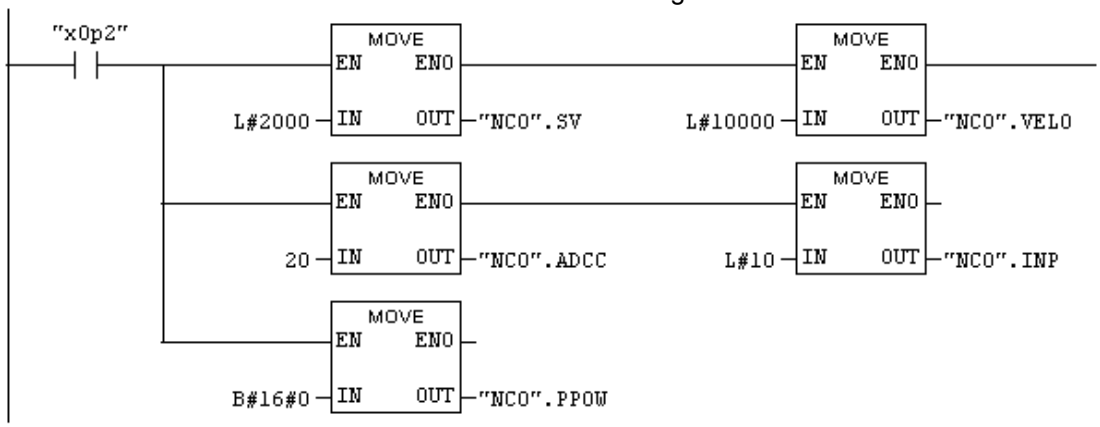

Step3 movement data set (normal movement)

Target position: 00.00 mm Speed: 100.00 mm/s

Acceleration/deceleration: 0.2 Positioning band: 00.10 mm Push rate: 0%

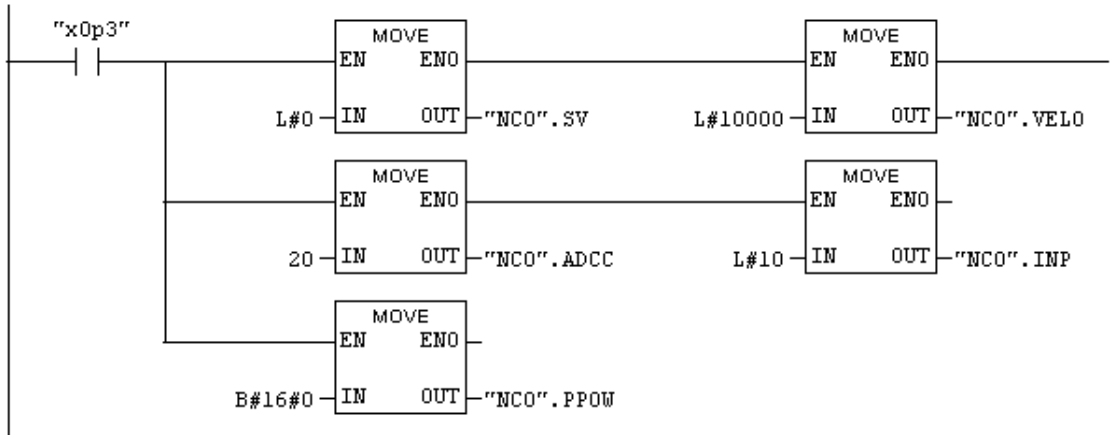

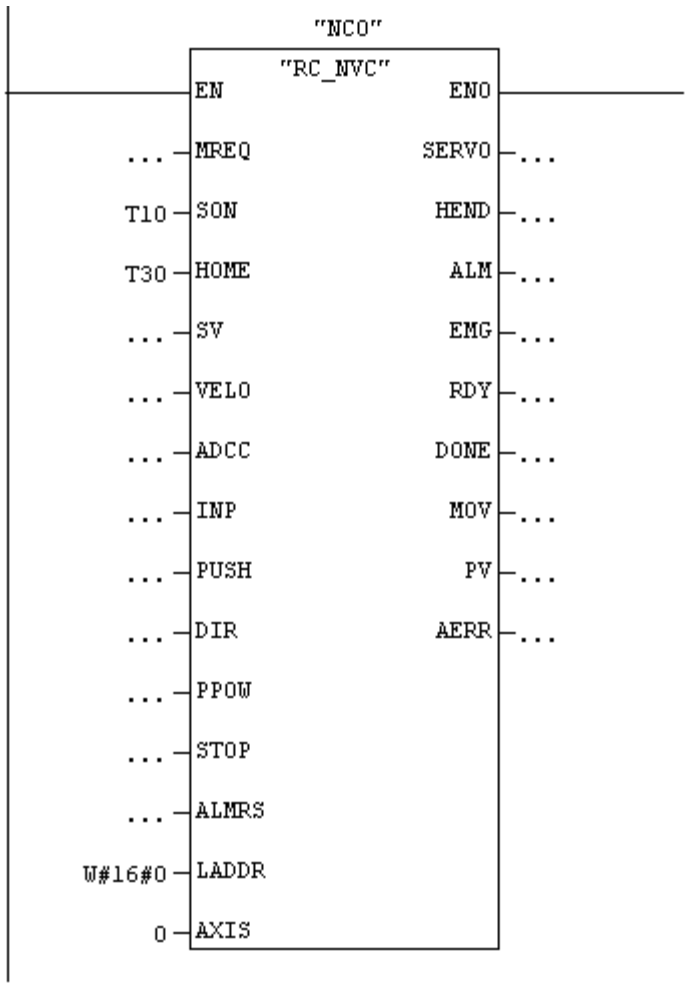

A motion FB for axis 0 is always called.
The instance name is “NC0.”
Data is sent/received based on NC0.[tentative parameter].

The I/O head addresses are “0.”
The axis number is “0.”

Appendix 4. Supply Format and Use Procedure of FB/FCt

FBs are provided as source files ([Function block name_Version].AWL).
The steps to use a provided source file in a user project are explained below.

[1] Select the “Sources” folder, click **Insert**, and then click **External Source...**.

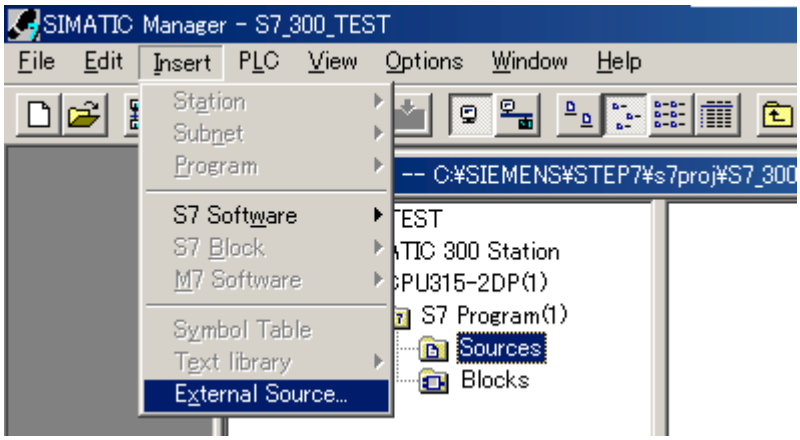

[2] When the following file selection window opens, select an appropriate source file, and then click **Save**.

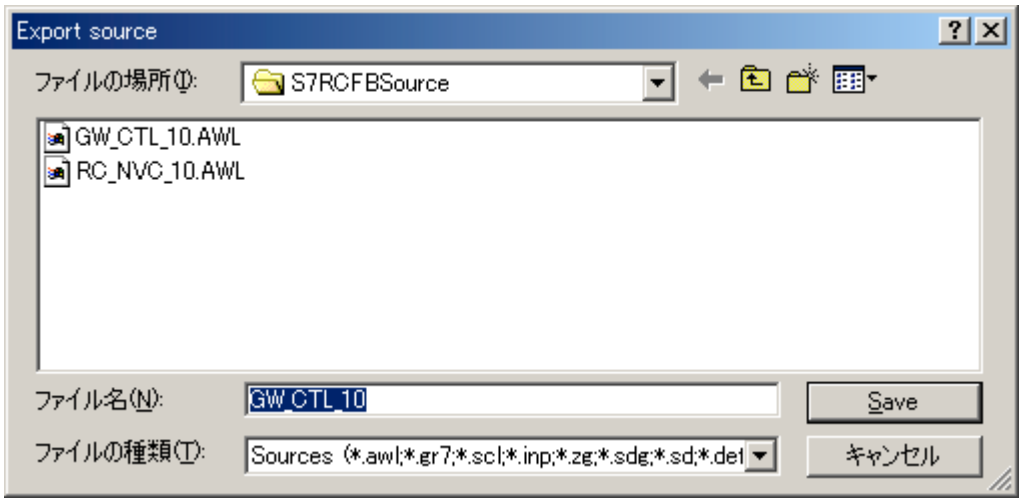

[3] The source file will be imported to the “Sources” folder.

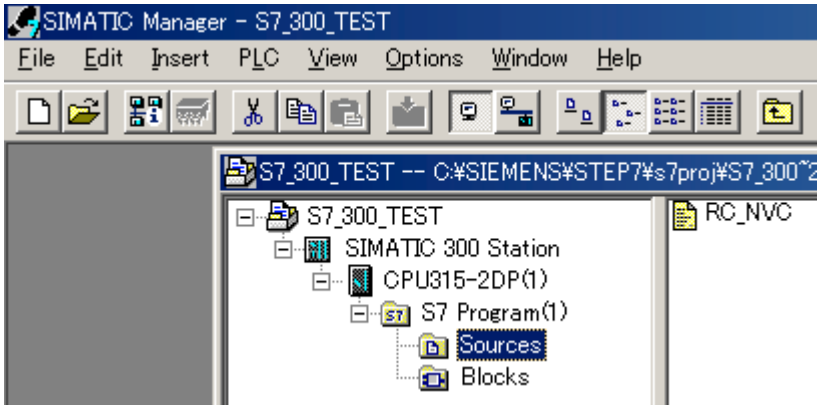

[4] Start Symbol Editor, and save the FB RC_NVC under a desired FB number.

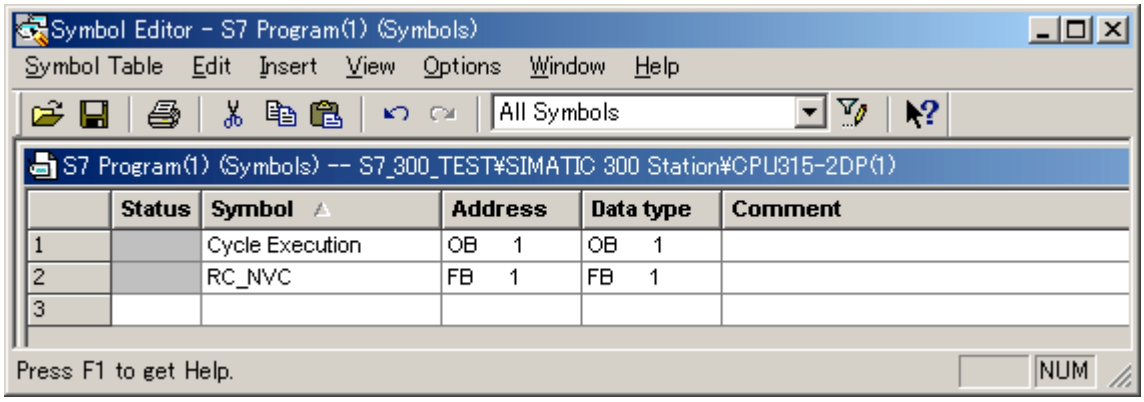

[5] Compile the source file

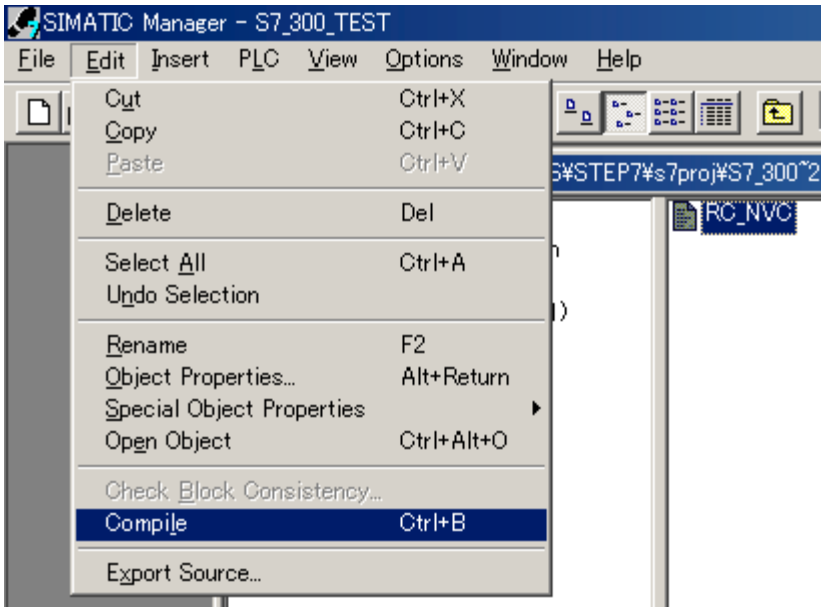

[6] When the compiling is complete, the registered function block will be generated in the “Blocks” folder.

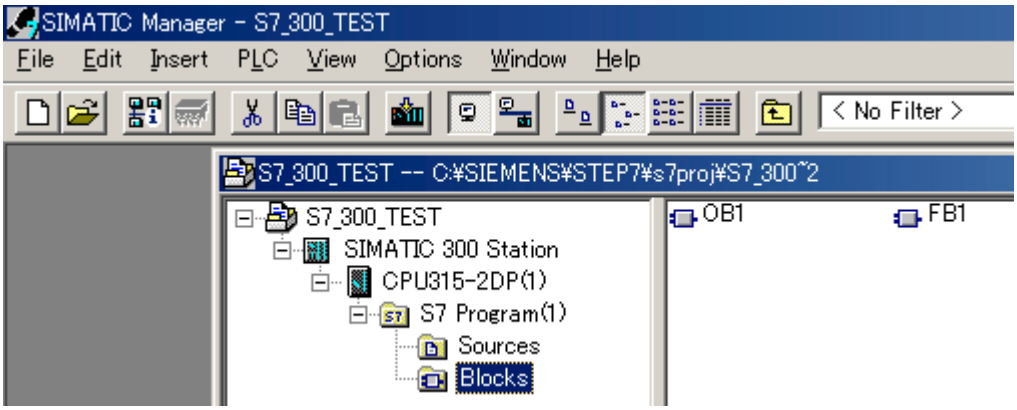

Now, FB1, namely RC_NVC, can be called from OB1.

RoboCylinder Profibus Gateway, Manual No.: 0305-E

Hardware Version: ED-051-0-001-1-***-0 (November 2004)
Software Version: ED-051-8-001-1-002-3 (March 2005)

Quality and Innovation

IAI Industrieroboter GmbH
Ober der Röth 4, D-65824 Schwalbach / Taunus
Germany
Phone:+49-(0)6196-8895-0
Fax: +49-(0)6196-8895-24
E-Mail: info@IAI-GmbH.de
Internet: http://www.eu.IAI-GmbH.de

IAI America Inc.
2690 W. 237th Street, Torrance, CA 90505, USA
Tel.: +1-310-891-6015 Fax: +1-310-891-0815

IAI CORPORATION
645-1 Shimizu Hirose, Shizuoka 424-0102, Japan
Tel.: +81-543-64-5105 Fax: +81-543-64-5182

The information contained in this document is subject to change without notice for the purpoe of product improvement.
Copyright © 2005. Mar. IAI Corporation. All rights reserved.